HEWLETT-PACKARD

OTS LIBRARY

HP 3478A Digital Multimeter

Service Manual

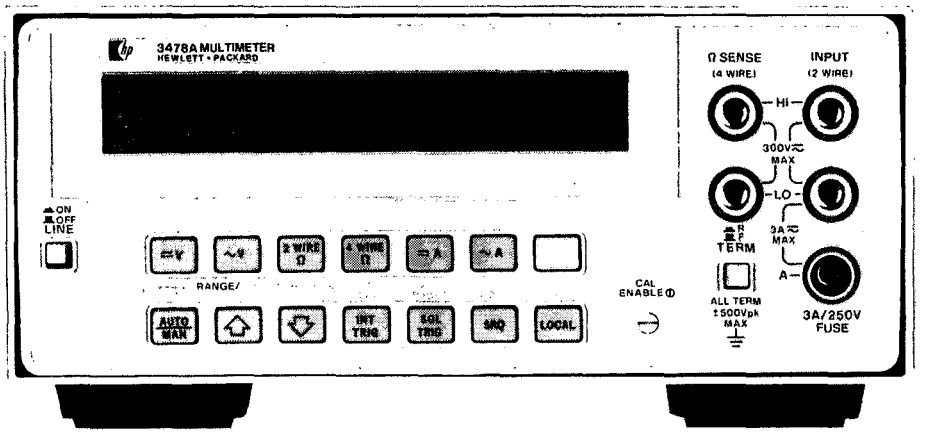

OTS LIBRARY
2400008924
A3

aoc j

HEWLETT PACKARD

SERVICE MANUAL

MODEL 3478A DIGITAL MULTIMETER

Serial Numbers: This manual applies directly to instruments with Serial Number 2619A37795 and above.

IMPORTANT NOTICE

If the Serial Number of your instrument is lower than the one on this Title Page, the manual contains revisions that do not apply to your instrument. Backdating information given in Section VI adapts the manual to earlier instruments.

WARNING

To help minimize the possibility of electrical fire or shock hazards, do not expose this instrument to rain or excess moisture.

The information in this manual is for the use of Service Trained Personnel. To avoid shock, do not perform any procedures in the manual or do any servicing to the 3478A unless you are qualified to do so.

Manual Part No. 03478-90008

Microfiche Part No. 03478-99008

©Copyright Hewlett-Packard Company 1981, 1987,
P.O. Box 301, Loveland, Colorado, 80539 U.S.A

Section I, II, III
General Information
Installation
and Operation

Section IV
Performance Test
and Calibration

Section V
Replaceable Parts

Section VI
Backdating

Section VII
Service

Appendix

Printed: September 1987
Edition 2: E0987

HEWLETT PACKARD

CERTIFICATION

Hewlett-Packard Company certifies that this product met its published specifications at the time of shipment from the factory. Hewlett-Packard further certifies that its calibration measurements are traceable to the National Institute of Standards and Technologies, to the extent allowed by the Institute's calibration facility, and to the calibration facilities of other International Standards Organization members.

WARRANTY

This Hewlett-Packard instrument product is warranted against defects in materials and workmanship for a period of one year from date of shipment [,except that in the case of certain components listed in Section I of this manual, the warranty shall be for the specified period]. During the warranty period, Hewlett-Packard Company will, at its option, either repair or replace products which prove to be defective.

For warranty service or repair, this product must be returned to a service facility designated by -hp-. Buyer shall prepay shipping charges to -hp- and -hp- shall pay shipping charges to return the product to Buyer. However, Buyer shall pay all shipping charges, duties, and taxes for products returned to -hp- from another country.

Duration and conditions of warranty for this instrument may be superceded when the instrument is integrated into (becomes a part of) other -hp- instrument products.

Hewlett-Packard warrants that its software and firmware designated by -hp- for use with an instrument will execute its programming instructions when properly installed on that instrument. Hewlett-Packard does not warrant that the operation of the instrument, or software, or firmware will be uninterrupted or error free.

LIMITATION OF WARRANTY

The foregoing warranty shall not apply to defects resulting from improper or inadequate maintenance by Buyer, Buyer-supplied software or interfacing, unauthorized modification or misuse, operation outside of the environmental specifications for the product, or improper site preparation or maintenance.

NO OTHER WARRANTY IS EXPRESSED OR IMPLIED. HEWLETT-PACKARD SPECIFICALLY DISCLAIMS THE IMPLIED WARRANTIES OF MERCHANTABILITY AND FITNESS FOR A PARTICULAR PURPOSE.

EXCLUSIVE REMEDIES

THE REMEDIES PROVIDED HEREIN ARE BUYER'S SOLE AND EXCLUSIVE REMEDIES. HEWLETT-PACKARD SHALL NOT BE LIABLE FOR ANY DIRECT, INDIRECT, SPECIAL, INCIDENTAL, OR CONSEQUENTIAL DAMAGES, WHETHER BASED ON CONTRACT, TORT, OR ANY OTHER LEGAL THEORY.

ASSISTANCE

Product maintenance agreements and other customer assistance agreements are available for Hewlett-Packard products.

For any assistance, contact your nearest Hewlett-Packard Sales and Service Office. Addresses are provided at the back of this manual.

HEWLETT PACKARD

Herstellerbescheinigung

Hiermit wird bescheinigt, daβ das Gerät/System HP 3478A in Übereinstimmung mit den Bestimmungen von Postverfügung 1046/84 funkentstört ist.

Der Deutschen Bundespost wurde das Inverkehrbringen dieses Gerätes/Systems angezeigt und die Berechtigung zur Überprüfung der Serie auf Einhaltung der Bestimmungen eingeräumt.

Zusatzinformation fur Meβ- und Testgeräte

Werden Meβ- und Testgeräte mit ungeschirmten Kabeln und/oder in offenen Meβaufbauten verwendet, so ist vom Betreiber sicherzustellen, daβ die Funk-Entstörbestimmungen unter Betriebsbedingungen an seiner Grundstücksgrenze eingehalten werden.

Manufacturer's declaration

This is to certify that the equipment HP 3478A is in accordance with the Radio Interference Requirements of Directive FTZ 1046/84. The German Bundespost was notified that this equipment was put into circulation, the right to check the series for compliance with the requirements was granted.

Additional Information for Test- and Measurement Equipment

If Test- and Measurement Equipment is operated with unscreened cables and/or used for measurements on open set-ups, the user has to assure that under operating conditions the Radio Interference Limits are still met at the border of his premises.

HEWLETT PACKARD

SAFETY SUMMARY

The following general safety precautions must be observed during all phases of operation, service, and repair of this instrument. Failure to comply with these precautions or with specific warnings elsewhere in this manual violates safety standards of design, manufacture, and intended use of the instrument. Hewlett-Packard Company assumes no liability for the customer's failure to comply with these requirements. This is a Safety Class 1 instrument.

GROUND THE INSTRUMENT

To minimize shock hazard, the instrument chassis and cabinet must be connected to an electrical ground. The instrument is equipped with a three-conductor ac power cable. The power cable must either be plugged into an approved three-contact electrical outlet or used with a three-contact to two-contact adapter with the grounding wire (green) firmly connected to an electrical ground (safety ground) at the power outlet. The power jack and mating plug of the power cable meet International Electrotechnical Commission (IEC) safety standards.

DO NOT OPERATE IN AN EXPLOSIVE ATMOSPHERE

Do not operate the instrument in the presence of flammable gases or fumes. Operation of any electrical instrument in such an environment constitutes a definite safety hazard.

KEEP AWAY FROM LIVE CIRCUITS

Operating personnel must not remove instrument covers. Component replacement and internal adjustments must be made by qualified maintenance personnel. Do not replace components with power cable connected. Under certain conditions, dangerous voltages may exist even with the power cable removed. To avoid injuries, always disconnect power and discharge circuits before touching them.

DO NOT SERVICE OR ADJUST ALONE

Do not attempt internal service or adjustment unless another person, capable of rendering first aid and resuscitation, is present.

DO NOT SUBSTITUTE PARTS OR MODIFY INSTRUMENT

Because of the danger of introducing additional hazards, do not install substitute parts or perform any unauthorized modification to the instrument. Return the instrument to a Hewlett-Packard Sales and Service Office for service and repair to ensure that safety features are maintained.

DANGEROUS PROCEDURE WARNINGS

Warnings, such as the example below, precede potentially dangerous procedures throughout this manual. Instructions contained in the warnings must be followed.

WARNING

Dangerous voltages, capable of causing death, are present in this instrument. Use extreme caution when handling, testing, and adjusting.

HEWLETT PACKARD

SAFETY SYMBOLS

General Definitions of Safety Symbols Used On Equipment or In Manuals.

⚠	Instruction manual symbol: the product will be marked with this symbol when it is necessary for the user to refer to the instruction manual in order to protect against damage to the instrument.
ϟ	Indicates dangerous voltage (terminals fed from the interior by voltage exceeding 1000 volts must be so marked).
⏚ OR ⏚	Protective conductor terminal. For protection against electrical shock in case of a fault. Used with field wiring terminals to indicate the terminal which must be connected to ground before operating equipment.
⏚	Low-noise or noiseless, clean ground (earth) terminal. Used for a signal common, as well as providing protection against electrical shock in case of a fault. A terminal marked with this symbol must be connected to ground in the manner described in the installation (operating) manual, and before operating the equipment.
⏚ OR ⊥	Frame or chassis terminal. A connection to the frame (chassis) of the equipment which normally includes all exposed metal structures.
∼	Alternating current (power line).
⎓	Direct current (power line).
≂	Alternating or direct current (power line).
WARNING	The WARNING sign denotes a hazard. It calls attention to a procedure, practice, condition or the like, which, if not correctly performed or adhered to, could result in injury or death to personnel.
CAUTION	The CAUTION sign denotes a hazard. It calls attention to an operating procedure, practice, condition or the like, which,if not correctly performed or adhered to, could result in damage to or destruction of part or all of the product.
NOTE:	The NOTE sign denotes important information. It calls attention to procedure, practice, condition or the like, which is essential to highlight.

TABLE OF CONTENTS

Section Page

I. GENERAL INFORMATION 1-1
- 1-1. Introduction 1-1
- 1-3. Section I, General Information 1-1
- 1-5. Section II, Installation Procedures ... 1-1
- 1-7. Section III, Operation 1-1
- 1-9. Section IV, Performance Test and Calibration 1-1
- 1-11. Section V, Replaceable Parts 1-1
- 1-13. Section VI, Backdating 1-1
- 1-15. Section VII, Service 1-1
- 1-17. Appendix A 1-1
- 1-19. Description 1-1
- 1-22. Specifications 1-1
- 1-24. Instrument and Manual Identification 1-1
- 1-27. Options 1-5
- 1-29. Accessories Available 1-5

Section Page

II. INSTALLATION 2-1
- 2-1. Introduction 2-1
- 2-3. Initial Inspection 2-1
- 2-5. Power Requirements 2-1
- 2-7. Line Frequency and Line Voltage Selection 2-1
- 2-9. Power Cords and Receptacles 2-2
- 2-11. Grounding Requirements 2-2
- 2-13. Bench Use and Rack Mounting 2-2
- 2-14. Bench Use 2-2
- 2-16. Rack Mounting 2-3
- 2-18. HP-IB Interface Connections 2-3
- 2-21. Address Selection 2-3
- 2-24. Environmental Requirements 2-3
- 2-25. Operating and Storage Temperature 2-3
- 2-27. Repackaging for Shipment 2-4

Section Page

III. OPERATION 3-1
- 3-1. Introduction 3-1
- 3-4. General Information 3-1
- 3-5. AC Power Operation 3-1
- 3-7. Turn-On 3-1
- 3-10. Display 3-1
- 3-12. Input Terminals 3-3
- 3-15. Input Terminals Cleaning 3-3
- 3-17. Front Panel Operation 3-3
- 3-18. DC Volts Measurements 3-3
- 3-22. AC Volts Measurements 3-4
- 3-26. Resistance Measurements 3-4
- 3-30. DC Current Measurements 3-5
- 3-34. AC Current Measurements 3-5
- 3-38. Ranging 3-5
- 3-43. Triggering 3-5
- 3-50. Shifted Operation 3-6

Section Page

III. OPERATION (Cont'd)
- 3-51. General 3-6
- 3-54. Number of Digits Displayed 3-6
- 3-57. Autozero 3-7
- 3-60. Self-Test/Reset Operation 3-7
- 3-63. Calibration 3-7
- 3-66. Miscellaneous Operations 3-8
- 3-67. Voltmeter Complete 3-8
- 3-69. Remote Operation 3-8
- 3-70. General 3-8
- 3-74. 3478A Response to Bus Messages ... 3-8
- 3-92. 3478A Addressing 3-10
- 3-96. Talk-Only Mode (No Controller) ... 3-10
- 3-98. 3478A HP-IB Programming 3-11
- 3-117. Advanced Programming 3-14

Section Page

IV. PERFORMANCE TEST AND CALIBRATION 4-1
- 4-1. Introduction 4-1
- 4-3. Test Equipment 4-1
- 4-5. Test Cards 4-1
- 4-7. Performance Test Failures 4-2
- 4-9. Test Considerations 4-2
- 4-10. Front and Rear Terminals 4-2
- 4-12. Specification 4-2
- 4-16. Reference Temperature 4-2
- 4-18. Accuracy of Standards 4-2
- 4-21. Performance Tests 4-3
- 4-23. DC Volts Test 4-3
- 4-28. DC Current Test 4-6
- 4-33. AC Volts Test 4-6
- 4-38. AC Current Test 4-8
- 4-43. Ohms Test 4-9
- 4-48. Calibration Procedure 4-11
- 4-49. General 4-11
- 4-55. Calibration Messages 4-12
- 4-57. DC Volts Calibration 4-12
- 4-61. DC Current Calibration 4-13
- 4-66. AC Volts Calibration 4-13
- 4-72. AC Current Calibration 4-14
- 4-78. Ohms Calibration 4-14
- 4-84. Remote Calibration 4-15
- 4-85. General 4-15
- 4-89. Remote Calibration Example 4-15

Section Page

V. REPLACEABLE PARTS 5-1
- 5-1. Introduction 5-1
- 5-4. Ordering Information 5-1
- 5-6. Non-Listed Parts 5-1
- 5-8. Parts Changes 5-1
- 5-10. Propriety Parts 5-1
- 5-12. 3478A Disassembly Procedure 5-1

TABLE OF CONTENTS (Cont'd)

Section		Page
VI.	BACKDATING	6-1
6-1.	Introduction	6-1
6-4.	2136A03480 & below	6-1
6-7.	2301A08635 & below	6-1
6-8.	2301A18860 & below	6-1
6-9.	2520A19795 & below	6-1
6-10.	2520A20970 & below	6-1
6-11.	2520A22585 & below	6-2
6-15.	2545A24740 & below	6-3
6-16.	2545A26015 & below	6-3
6-20.	2619A26305 & below	6-5
6-22.	2619A32988 & below	6-5

Section		Page
VII.	SERVICE	7-1
7-1.	Introduction	7-1
7-3.	Safety Considerations	7-1
7-8.	Recommended Test Equipment	7-1
7-10.	Miscellaneous Information	7-1
7-11.	Instrument Disassembly (PC Board Replacement)	7-1

Section		Page
VII.	SERVICE (Cont'd)	
7-13.	Fuse Replacement	7-1
7-15.	Troubleshooting	7-2
7-16.	Introduction	7-2
7-18.	3478A Self-Test	7-2
7-27.	Service Group Selection	7-2

Service Groups		Page
A	DC Volts and DC Current Troubleshooting	7-A-1
B	AC Volts and AC Current Troubleshooting	7-B-1
C	Ohms Troubleshooting	7-C-1
D	A/D Converter and Logic Troubleshooting	7-D-1
E	Power Supplies and Reference Troubleshooting	7-E-1
F	Theory of Operation	7-F-1
G	Schematics	7-G-1

APPENDIX A A-1

LIST OF TABLES

Tables		Page
1-1.	Specifications	1-2
3-1.	Shifted Operations	3-6
3-2.	3478A Error Messages	3-7
3-3.	3478A Bus Capabilities	3-8
3-4.	Status Byte Definitions	3-10
3-5.	3478A Address Codes	3-11
3-6.	3478A Program Codes	3-12
3-7.	Binary Status Byte Definition	3-14
4-1.	Abbreviated Specifications Table	4-1
4-2.	Recommended Test Equipment	4-1
4-3.	DC Volts Test Limits	4-3
4-4.	DC Current Test Limits	4-6
4-5.	AC Volts Test Limits	4-7
4-6.	AC Current Test Limits	4-8
4-7.	Ohms Test Limits	4-10
5-1.	Standard Abbreviations	5-1
5-2.	Code List of Manufacturers	5-2
5-3.	Replaceable Parts List	5-3
5-4.	3478A Mechanical and Miscellaneous Parts	5-8

Table		Page
6-1.	Changes to Table 5-3	6-1
6-2.	Changes to Table 6-9	6-1
6-3.	Changes to Table 6-9	6-1
6-4.	Changes to Table 5-3	6-1
6-5.	Changes to Table 1-1	6-2
6-6.	Changes to Table 4-1	6-2
6-7.	Changes to Table 4-3	6-3
6-8.	Changes to Table 4-5	6-3
6-9.	3478A Mechanical and Miscellaneous Parts	6-4
6-10.	Changes to Table 5-3	6-5
6-11.	Changes to Table 5-3	6-5
6-12.	Changes to Table 5-4	6-5
6-13.	Changes to Table 5-4	6-5
7-1.	3478A Service Groups	7-2
7-F-1.	Ohms Current and Ranges	7-F-7
7-F-2.	AC Amplifier Gains	7-F-9
A-1.	3478A Device Capability	A-3
A-2.	HP-IB Worksheet	

LIST OF ILLUSTRATIONS

Figure		Page
2-1.	Line Frequency Switch	2-1
2-2.	Line Select Jumper	2-2
2-3.	Power Cords	2-2
2-4.	Typical HP-IB System Interconnection	2-3
2-5.	HP-IB Connector	2-4
2-6.	3478A Address Switch	2-4
3-1.	3478A Front and Rear Panel Features	3-3
3-2.	Typical Input Measurement Connection	3-3
3-3.	Typical Current Measurement Connection	3-3
3-4.	Ohms Connections	3-4
3-5.	Autoranging Points	3-6
3-6.	Status Byte	3-9
4-1.	Ambiguous Regions	4-3
4-2.	DC Voltage Test and Calibration Connections	4-4
4-3.	DC Common Mode Rejection Test	4-5
4-4.	DC Current Test and Calibration Connections	4-7
4-5.	AC Voltage Test and Calibration Connections	4-8
4-6.	AC Current Test and Calibration Connections	4-9
4-7.	2-Wire Ohms Test and Calibration Connections	4-11
4-8.	4-Wire Ohms Test and Calibration Connections	4-11
4-9.	4-Wire Ohms Short	4-12
5-1.	3478A Front Panel View	5-9
5-2.	3478A Left Side View	5-9
5-3.	3478A Rear Panel View	5-9
5-4.	3478A Right Side View	5-9
5-5.	Top View With Cover Removed	5-9
5-6.	Regulator Detail View	5-9
5-7.	Motherboard and Front Panel Assembly	5-9
5-8.	Front Panel Assembly, Rear View	5-9
6-1.	Component Locator Rev B	6-7
6-2.	Schematic 4 Revision B Boards	6-7
6-3.	Component Locator Revision C	6-8
6-4.	Schematic 1 Input Circuitry	6-9
6-5.	Schematic 3 A/D Converter & Control Logic	6-11
6-6.	3478A Front Panel View	6-13
6-7.	3478A Rear Panel View	6-13
6-8.	3478A Bottom View	6-13
6-9.	3478A Left Side View	6-13
6-10.	Bottom View With Cover Removed	6-13
6-11.	Top View With Cover Removed	6-13
6-12.	Front Panel Bracket View	6-13
6-13.	Front Panel Assembly	6-13
7-A-1.	JM403 SA Connection	7-A-4
7-B-1.	JM403 SA Connection	7-B-2
7-C-1.	JM403 SA Connection	7-C-4
7-D-1.	U501 ALE Signal	7-D-2
7-D-2.	Flowchart A	7-D-3
7-D-3.	Flowchart B	7-D-5
7-D-4.	Flowchart C	7-D-6
7-D-5.	U462 ALE Signal	7-D-8
7-D-6.	Flowchart D	7-D-9
7-D-7.	JM403 SA Connection	7-D-10
7-F-1.	3478A Simplified Block Diagram	7-F-2
7-F-2.	Simplified Schematic of the Input Switching Circuitry	7-F-4
7-F-3.	Simplified Schematic of the DC/Ohms Input Amplifier	7-F-6
7-F-4.	Ohms Circuitry Configuration	7-F-6
7-F-5.	AC Gain Configurations	7-F-8
7-F-6.	Dual Slope Conversion	7-F-9
7-F-7.	Simplified A/D Converter	7-F-10
7-F-8.	Integrator (U401) Output Slopes	7-F-10
7-F-9.	Runup Slopes (4 1/2 Digit Model)	7-F-11
7-F-10.	Runup Slopes For Zero Inputs (4 1/2 Model)	7-F-12
7-F-11.	Slope S+4 Generation	7-F-12
7-F-12.	Slope S−4 Generation	7-F-12
7-F-13.	Slope S+0 and S−0 Generation	7-F-13
7-F-14.	Rundown Slopes	7-F-13
7-F-15.	Determining the DAC Setting	7-F-15
7-F-16.	A/D Hybrid (U403)	7-F-15
7-F-17.	3478A Simplified Reference Circuitry	7-F-16
7-F-18.	Power-On Circuitry	7-F-17
7-F-19.	Reset Circuitry	7-F-18
7-G-1.	General Schematic Notes	7-G-1
7-G-2.	3478A Block Diagram	7-G-3
7-G-3.	Input Circuitry and Ohms Current Source	7-G-5
7-G-4.	AC to DC Converter	7-G-7
7-G-5.	A/D Converter and Control Logic	7-G-9
7-G-6.	Power Supplies	7-G-11
A-1.	Interface Connection and Bus Structure	A-2

SECTION I
GENERAL INFORMATION

WARNING

The information in this manual is for the use of Service Trained Personnel. To avoid electrical shock, do not perform any procedures in the manual or do any servicing to the 3478A unless you are qualified to do so.

1-1. INTRODUCTION

1-2. The information in this manual is for the Installation, Operation, Performance, Calibration, and Service of the 3478A Digital Multimeter. The manual is designed for the use of Service Trained Personnel. Other users should refer to the Operators Manual. This manual is separated into the following sections.

1-3. Section I, General Information

1-4. A short description of the manual and introduction to the 3478A is in Section I. The section also lists instrument options, specifications, and accessories.

1-5. Section II, Installation Procedures

1-6. This section explains how the 3478A is prepared for use and includes power requirements, line voltage selection, etc. The section also explains how to connect the multimeter for remote operation.

1-7. Section III, Operation

1-8. The condensed operating instructions of the 3478A, for the use of Service Trained Personnel, is in this section. For more complete instructions, refer to the Operators Manual.

1-9. Section IV, Performance Test and Calibration

1-10. The 3478A's Performance Test and Calibration Procedures are in Section IV. The Required Equipment Table and an abbreviated specification table are also included.

1-11. Section V, Replaceable Parts

1-12. Section V lists the replaceable parts of the 3478A. It also includes pictures and illustrations of chassis and mechanical parts.

1-13. Section VI, Backdating

1-14. This section has information which adapts this manual to 3478A's with serial numbers below the ones shown on the title page.

1-15. Section VII, Service

1-16. The 3478A's Troubleshooting Procedures, Theory Of Operation, and Schematics are in Section VII. The troubleshooting information is in the form of Service Groups which are symptoms oriented (i.e., what is the failure). The complete theory of operation is in Service Group F and the Schematics are in Service Group G (last group).

1-17. Appendix A

1-18. The appendix has a condensed description of the HP-IB (Hewlett-Packard Interface Bus).

1-19. DESCRIPTION

1-20. The -hp- Model 3478A is a versatile multimeter with dc and ac volts, dc and ac currents, and resistance measurement capabilities. The multimeter is excellent for bench use, and since it is remotely programmable, it can be used in measurement systems. A feature of the instrument is that the reading can be displayed in either 5 1/2, 4 1/2, or 3 1/2 digits. Other features are Autozero (for good stability), and an Alphanumeric Liquid Crystal Display.

1-21. Another excellent feature is Electronic Calibration. No mechanical adjustments are necessary to calibrate the 3478A.

1-22. SPECIFICATIONS

1-23. Specifications of the 3478A are the performance characteristics of the multimeter which are certified. The specifications are listed in Table 1-1 and Table 4-1 (in Section IV). They are the performance standards or limits against which the multimeter can be tested.

1-24. INSTRUMENT AND MANUAL IDENTIFICATION

1-25. Instrument Identification is by a serial number located on the multimeter's rear panel. Hewlett-Packard uses a two-part serial number, with the first part (prefix) identifying a series of instruments and the

Table 1-1. Specifications

DC VOLTAGE

Input Characteristics:

Range	Maximum Reading (5½ Digit)	Resolution 5½ Digit	4½ Digit	3½ Digit
30mV	±30.3099mV	100nV	1μV	10μV
300mV	±303.099mV	1μV	10μV	100μV
3 V	±3.03099 V	10μV	100μV	1mV
30 V	±30.3099 V	100μV	1mV	10mV
300 V	±303.099 V	1mV	10mV	100mV

Input Resistance:

30mV, 300mV,3V ranges: $>10^{10}\Omega$
30V, 300V ranges: 10MΩ ± 1%

Maximum Input Voltage: (non-destructive)

Hi to Lo: 303V rms or 450V peak
Hi or Lo to Earth Ground: ±500V peak

Measurement Accuracy:

±(% of reading + number of counts)
Auto-zero ON

5 ½ Digit Mode:

Range	Cal. Temp. ±1 C 24 Hours	Cal. Temp. ±5 C 90 Day	1 Year
30 mV	0.025 + 40	0.0275 + 40	0.035 + 40
300 mV	0.004 + 4	0.005 + 5	0.007 + 5
3 V	0.003 + 2	0.004 + 2	0.006 + 2
30 V	0.004 + 3	0.005 + 4	0.007 + 4
300 V	0.004 + 2	0.005 + 2	0.007 + 2

4½ and 3½ Digit Mode:

Accuracy is the same as 5½ digit mode for % of reading; use 1 count for number of counts on all ranges except 30mV range use 4 counts.

The Cal. Temp. (Calibration Temperature) is the temperature of the environment where the 3478A was calibrated. Calibration should be performed with the temperature of the environment between 20°C and 30°C.

Auto-Zero Off:

(5½ digit) for a stable environment (±1°C), for <24 hrs., add 110 counts to accuracy specification for 30mV range, 11 counts for 300mV and 30V ranges, 3 counts for 3V and 300V range.

Temperature Coefficient:

0°C to 55°C
5½ digit display, auto-zero ON
± (% of reading + number of counts)/°C

Range	Temperature Coefficient
30mV	0.0028 + 5.0
300mV	0.0005 + 0.5
3 V	0.0004 + 0.05
30 V	0.0006 + 0.5
300 V	0.0004 + 0.05

Noise Rejection:

In dB, with 1kΩ imbalance in Lo lead. AC rejection for 50, 60Hz ± 0.1%. Auto-zero ON.

Display	AC NMR	AC ECMR	DC CMR
5½ digits	80	150	140
4½ digits	59	130	140
3½ digits	0	70	140

Maximum Reading Rates: (readings/sec)

First reading is correct when triggered coincident with step input.

The reading rates are dependent on the speed of the controller being used.

Line Frequence	Auto Zero	Resolution 3½ Digits	4½ Digits	5½ Digits
60Hz	Off	90	35	4.4
	On	60	20	2.3
50Hz	Off	85	30	3.7
	On	50	17	1.9

AC VOLTAGE(true rms responding)

Input Characteristics:

Range	Maximum Reading (5½ Digit)	Resolution 5½ Digit	4½ Digit	3½ Digit
300mV	303.099mV	1μV	10μV	100μV
3 V	3.03099 V	10μV	100μV	1mV
30 V	30.3099 V	100μV	1mV	10mV
300 V	303.099 V	1mV	10mV	100mV

Input Impedance:

1MΩ ± 1% shunted by <60pF

Maximum Input Voltage: (non-destructive)

Hi to Lo: 303Vrms or 450V peak
Hi or Lo to Earth Ground: ±500V peak

Measurement Accuracy:

±(% of reading + number of counts)
Auto-zero ON. 5½ digit display. Accuracy is specified for sine-wave inputs only, >10% of full scale.
1 Year, Cal. Temp. ±5°C

Input Frequency	300mV	Ranges 3V, 30V	300V
20Hz-50Hz	1.14 + 163	1.14 + 102	1.18 + 102
50Hz – 100Hz	0.46 + 163	0.46 + 103	0.50 + 102
100Hz – 20kHz	0.20 + 120	0.20 + 70	0.24 + 70
20kHz – 50kHz	0.38 + 205	0.26 + 140	0.42 + 140
50kHz – 100kHz	1.20 + 840	0.87 + 780	0.98 + 780
100kHz – 300kHz		10.1 + 3720 (30V Range Only)	

Table 1-1. Specifications (Cont'd)

Auto Zero Off:

(5½ digits) for a stable environment (±1°C), for <24 hrs., add 10 counts to accuracy specifications for all ranges.

Temperature Coefficient:

0°C to 55°C
5½ digit display, auto-zero ON.
For frequencies <20kHz, ±(0.016% of reading + 10 counts)/°C
For frequencies >20kHz, ±(0.04% of reading + 10 counts)/°C

Crest Factor:

>4:1 at full scale.

Common Mode Rejection:

With 1kΩ imbalance in Lo lead, >70dB, at 60Hz.

Maximum Reading Rates: (readings/sec)

First reading is correct within 70 counts of final value, when on correct range, triggered coincident with step input. Add 0.6 seconds for each range change.

Reading rates are the same as dc volts using fast trigger (T5). Using Normal Trigger (T1, T2, T3):

For 50 or 60Hz operation, auto-zero ON or OFF.
3½ or 4½ digits: 1.4
5½ digits: 1.0

RESISTANCE (2-wire Ω, 4-wire Ω)

Input Characteristics:

Range	Maximum Reading (5½ Digit)	Resolution 5½ Digit	4½ Digit	3½ Digit
30 Ω	30.3099 Ω	100 μΩ	1mΩ	10mΩ
300 Ω	303.099 Ω	1mΩ	10mΩ	100mΩ
3 kΩ	3.03099 kΩ	10mΩ	100mΩ	1 Ω
30 kΩ	30.3099 kΩ	100mΩ	1 Ω	10 Ω
300 kΩ	303.099 kΩ	1 Ω	10 Ω	100 Ω
3MΩ	3.03099MΩ	10 Ω	100 Ω	1 kΩ
30MΩ	30.3099MΩ	100 Ω	1 kΩ	10 kΩ

Input Protection: (non-destructive)

Hi source to Lo source: ±350V peak
Hi sense to Lo sense: ±350V peak
Hi or Lo to Earth Ground: ±500V peak

Measurement Accuracy:

±(% of reading + number of counts)
Auto-zero ON. 4-wire ohms.
Maximum INPUT LO impedance is 3.3% of full scale.

5½ Digit Mode:

Range	Cal. Temp ± 1°C 24 Hours	Cal. Temp. ±5°C 90 Day	1 Year
30Ω	0.023 + 35	0.027 + 41	0.034 + 41
300Ω	0.0045 + 4	0.012 + 5	0.017 + 5
3k – 300kΩ	0.0035 + 2	0.011 + 2	0.016 + 2
3 MΩ	0.0052 + 2	0.011 + 2	0.016 + 2
30MΩ	0.036 + 2	0.066 + 2	0.078 + 2

Note

>30 M ohm Range accuracy is approximately 0.002%/M ohm.

2-Wire Ohms Accuracy:

Same as 4-wire ohms, except add a maximum of 200mΩ offset. On the 3M ohm Range, add .0016% of reading and on the 30M ohm Range, add .0083%.

Auto-Zero Off:

(5½ digit) for a stable environment (±1°C), for <24 hrs., add 110 counts to accuracy specification for 30Ω range, 11 counts for 300Ω, 3 counts for 3KΩ through 300KΩ ranges, 8 counts for 3MΩ range, and 33 counts for 30MΩ range.

Temperature Coefficient:

0°C to 55°C
5½ digit display, auto-zero ON
± (% of reading + number of counts)/°C

Range	Temperature Coefficient
30Ω	0.003 + 5
300Ω	0.0009 + .5
3k – 300kΩ	0.0009 + .05
3MΩ	0.0021 + .05
30MΩ	0.021 + .05

Current Through Unknown:

Range	Current
30 ohm	1mA
300 ohm	1mA
3K ohm	1mA
30K ohm	100μA
300K ohm	10μA
3M ohm	1μA
30M ohm	100nA

Maximum Open Circuit Voltage:

6.5V

Maximum Reading Rates:

Same as dc volts, except for 3MΩ and 30MΩ ranges. For 3MΩ range, add 30ms; for 30MΩ range, add 300ms per reading.

DC CURRENT

Input Characteristics:

Range	Maximum Reading (5½ Digit)	Resolution 5½ Digit	4½ Digit	3½ Digit
300mA	±303.099mA	1μA	10μA	100μA
3 A	±3.03099 A	10μA	100μA	1mA

Maximum Input: (non-destructive)

3A from <250V source; fuse protected

Measurement Accuracy:

± (% of reading + number of counts)
Auto-zero ON. 5½ digit display.

Range	Cal. Temp. ±5°C 90 Days	1 Year
300mA	0.11 + 40	0.15 + 40
3A, <1A input	0.14 + 6	0.17 + 6
3A, >1A input	1.0 + 30	1.0 + 30

Table 1-1. Specifications (Cont'd)

Auto-Zero Off:

(5½ digit) for a stable environment (±1°C), for <24 hrs., add 110 counts to accuracy specification for 300mA range, 11 counts for 3A range.

Temperature Coefficient:

0°C to (Cal. Temp. −5°C),(Cal. Temp. +5°C) to 55°C
5½ digit display, auto-zero ON
± (% of reading + number of counts)/°C

Range	Temperature Coefficient
300mA	0.012 + 5
3 A	0.012 + 0.5

Maximum Burden at Full Scale:

1V

Maximum Reading Rates:

Same as dc volts

AC CURRENT (true rms responding)

Input Characteristics:

Range	Maximum Reading (5½ Digit)	Resolution 5½ Digit	4½ Digit	3½ Digit
300mA	303.099mA	1μA	10μA	100μA
3 A	3.03099 A	10μA	100μA	1mA

Maximum Input: (non-destructive)

3A from <250V source; fuse protected

Measurement Accuracy:

± (% of reading + number of counts)
Auto-zero ON, 5½ digit display, accuracy specified for sine-wave inputs only >10% of full scale.
1 YEAR, CAL. TEMP. ±5°C

Frequency	Ranges 300mA	3A
20Hz – 50Hz	1.54 + 163	2.24 + 163
50Hz – 1kHz	0.81 + 163	1.5 + 163
1kHz – 10kHz	0.72 + 163	1.42 + 163
10kHz – 20kHz	0.86 + 163	1.56 + 163

Auto-zero Off:

(5½ digits) for a stable environment (±1°C), for <24 hrs., add 10 counts to accuracy specification.

Temperature Coefficient:

0°C to 55°C.
5½ digits, auto-zero ON.
± (0.021% of reading + 10 counts)/°C

Maximum Burden at Full Scale:

1V

Crest Factor:

>4:1 at full scale

Maximum Reading Rates:

Same as ac volts

GENERAL INFORMATION

Operating Temperature:

0 to 55°C

Humidity Range:

95% R.H., 0 to 40°C

Storage Temperature:

−40°C to 75°C

Warm-up Time:

1 hr. to meet all specifications.

Integration Time:

Number of Digits	Line Frequency 50Hz	60Hz
5½	200ms	166.7ms
4½	20ms	16.67ms
3½	2ms	1.667ms

Power:

AC Line 48 – 440Hz; 86 – 250V, (see configuration)

Maximum Power:

<25 watts

Size:

102mm H x 215mm W x 356mm D
(4 in H x 8 in W x 14 in D)

Weight:

3Kg (6.5 lbs.)

second part (suffix) identifying a particular instrument within a series. An -hp- assigned alpha character between the prefix and suffix identifies the country in which the 3478A was manufactured.

1-26. This manual applies to instruments with the serial number identified on the title page. Updating of the manual is accomplished either by a change sheet or revised manual.

1-27. OPTIONS

1-28. The following options are available for the 3478A.

Option 315: set for 100V, 50Hz Power Source
Option 316: set for 100V, 60Hz Power Source
Option 325: set for 120V, 50Hz Power Source
Option 326: set for 120V, 60Hz Power Source
Option 335: set for 220V, 50Hz Power Source
Option 336: set for 220V, 60Hz Power Source
Option 345: set for 240V, 50Hz Power Source
Option 346: set for 240V, 60Hz Power Source
Option 907: Front Handle Kit
(For serial prefix 2301 and below, use English hardware -hp- Part No. 5061-0088. For serial prefix 2520 and above, use Metric hardware -hp- Part No. 5061-9688,)
Option 908: Rack Mounting Kit - includes one rack flange and one extension adapter (For serial prefix 2301 and below, use English hardware -hp- Part No. 5061-0072). For serial prefix 2520 and above, use Metric hardware -hp- Part No. 5061-9672.
Option 910: additional set of Operators and Service Manuals
Option W30: Three Year Extended Warranty.

CAUTION

Your instrument may have either metric or English hardware. DO NOT intermix the different hardware or damage to the instrument's frame and cabinet may result. For instruments with serial prefix 2520 and above, use metric handle/rack mounting hardware (listed above). For instruments with serial prefix 2301 and below, use English handle/rack mounting hardware (listed above). Contact your local Hewlett-Packard Sales and Support Office if additional information is needed.

1-29. ACCESSORIES AVAILABLE

1-30. The following is a list of available accessories for the 3478A.

Accessory No.	Description
10023A	Temperature Probe
10833A	HP-IB Cable 1 meter (39.37 in)
10833B	HP-IB Cable 2 meter (78.74 in)
10833C	HP-IB Cable 4 meter (157.48 in)
10833D	HP-IB Cable 0.5 meter (19.69 in)
11096B	RF Probe
34111A	High Voltage Probe, DC 40 kV
34118A	Test Lead Kit
34119A	High Voltage probe, AC or DC 5 kV
03478-10085	Test and Calibration Software (for HP 85B)

SECTION II
INSTALLATION

2-1. INTRODUCTION

2-2. This section of the manual has the necessary information and instructions to install and interface the -hp- Model 3478A Digital Multimeter. Included are initial inspection procedures, power requirements, environmental information, and instructions for repacking the instrument for shipment. The information in this section is for Service Trained Personnel.

WARNING

The information in this manual is for the use of Service Trained Personnel. To avoid electrical shock, do not perform any procedures in this manual or do any servicing to the 3478A unless you are qualified to do so.

2-3. INITIAL INSPECTION

2-4. The 3478A was carefully inspected both mechanically and electrically before shipment. It should be free of mars or scratches and in perfect electrical order upon receipt. The multimeter should be inspected for any damage that may have occurred in transit. If the shipping container or cushioning material is damaged, it should be kept until the contents of the shipment have been checked for completeness and the instrument has been mechanically and electrically checked. Procedures for checking the electrical performance of the 3478A are in Section IV. If there is mechanical damage, the contents are incomplete, or the multimeter does not pass the Performance Test, notify the nearest Hewlett-Packard office (a list of the -hp-Sales/Service offices is located in the back of the manual). If the shipping container is damaged or the cushioning material shows signs of stress, notify the carrier as well as the Hewlett-Packard office. Save the shipping material for the carrier's inspection.

2-5. POWER REQUIREMENTS

2-6. The 3478A requires a power source of 100V, 120V, 220V, or 240V ac (−10%, +5%), 48Hz to 440Hz single phase. The maximum power consumption is 25VA. For the 3478A to meet its noise and normal mode rejection specifications, the multimeter must be operated using a line frequency of either 50Hz or 60Hz (dependent on instrument option). A listing of the 3478A's power options, the corresponding power line voltages and frequencies, and fuses are as follows:

Option	Voltage and Frequency	Fuse
Option 315	100V ac @ 50Hz	250mAT
Option 316	100V ac @ 60Hz	250mAT
Option 325	120V ac @ 50Hz	250mAT
Option 326	120V ac @ 60Hz	250mAT
Option 335	220V ac @ 50Hz	125mAT
Option 336	220V ac @ 60Hz	125mAT
Option 345	240V ac @ 50Hz	125mAT
Option 346	240V ac @ 60Hz	125mAT

CAUTION

Before connecting power to the 3478A, make sure the power source matches the power requirements of the multimeter, as marked on the rear panel (below the power receptacle). If the instrument is incompatible with the available power source, go to paragraph 2-7 to reconfigure the multimeter.

2-7. Line Frequency and Line Voltage Selection

WARNING

To avoid electrical shock and personal injury, make sure the multimeter is disconnected from its external power voltage source before removing any covers.

2.8 The Power Line Frequency configuration of the 3478A is set by the leftmost switch in the 8 secion "DIP" switch on the multimeter's rear panel. Locate the switch and set the rocker to the desired line power frequency (either 50 Hz or 60 Hz). The switch is shown in Figure 2-1 (shown set for 60 Hz operation). To set the 3478's input line voltage, perform the following procedure.

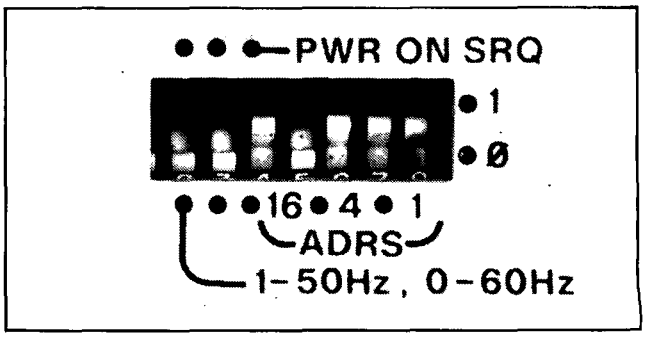

Figure 2-1. Line Frequency Switch

a. Remove the 3478A rear bezel and top cover as described in Section V of this manual.

b. Locate the Line Select wire (gray) and the line terminals. The Line and the terminals are located between the 3478A's power transformer and rear panel.

c. Refer to Figure 2-2 and connect the gray wire to the line terminal corresponding to the desired input line voltage.

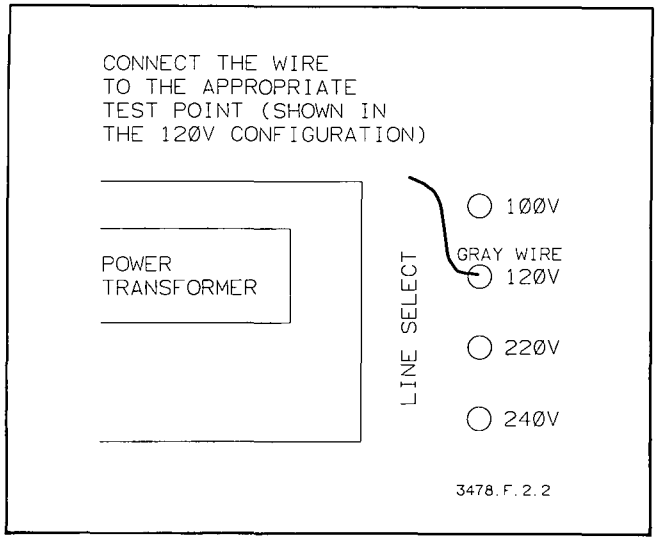

Figure 2-2. Line Select Jumper

d. After changing the Line Voltage, make sure the correct fuse is installed. For 100 V or 120 V operation, use a .25AT 250 V fuse (-hp- Part No. 2110-0201). For 220 V or 240 V operation, use a .125AT 250 V fuse (-hp- Part No. 2110-0318).

e. Reinstall the 3480A top cover and rear bezel.

2-9. POWER CORDS AND RECEPTACLES

2-10. Figure 2-3 illustrates the different power plug configurations that are available to provide power to the 3478A. The -hp- part number shown directly below the individual power plug drawing is the part number for the power cord set equipped with the appropriate mating plug for that receptacle. If the appropriate power cord is not included with the instrument, notify the nearest -hp- Sales and Support Office and a replacement will be provided.

2-11. GROUNDING REQUIREMENTS

2-12. To protect operating personnel, the National Electrical Manufacturing Association (NEMA) recommendation is to ground the instrument panel and cabinet. The 3478A is equipped with a three conductor power cable which, when plugged into an appropriate receptacle, grounds the instrument.

2-13. BENCH USE AND RACK MOUNTING

2-14. Bench Use

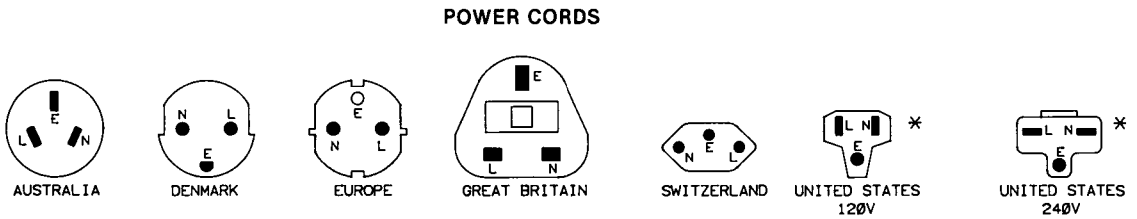

Country	Part Number	Opt.	Voltage
Australia	8120-1369	901	250V 6A
Denmark	8120-2956	912	250V 6A
Europe	8120-1689	902	250V 6A
Great Britain	8120-1351	900	250V 6A
Switzerland	8120-2104	906	250V 6A
*United States	8120-1378	903	120V 10A
*United States	8120-0698	904	240V 10A

Power cords supplied by HP have polarities matched to the power input socket on the instrument:

- L = Line or Active Conductor (also called "live" or "hot").
- N = Neutral or Identified Conductor
- E = Earth or Safety Ground

NOTE: Plugs are viewed from connector end. Shape of molded plug may vary within country.

* CSA certification includes only these Power Plugs

Figure 2-3. Power Cords

2-15. The 3478A is equipped with feet and tilt stands installed and is ready for use as a bench instrument. The feet are shaped to permit stacking with other half-module Hewlett-Packard instruments.

2-16. Rack Mounting

2-17. The 3478A may be rack mounted by adding rack mounting kit Option 908. The basic hardware and instructions for rack mounting is contained in the kit. The kit is designed to permit the 3478A to be mounted in a standard 19 inch rack, provided that sufficient rear support is available.

2-18. HP-IB INTERFACE CONNECTIONS

2-19. The 3478A is compatible with the Hewlett-Packard Interface Bus (HP-IB).

NOTE

HP-IB is Hewlett-Packard's implementation of IEEE Std. 488-1978, "Standard Digital Interface For Programmable Instrumentation" and ANSI MC. 1.1.

2-20. The interface connection is made by an HP-IB Interface Cable to the 24 pin HP-IB connector located at the rear panel. A typical interconnection of an HP-IB system is shown in Figure 2-4, in which ends of the cables have both a male and female connector to enable connections to other instruments and cables. As many as 15 instruments can be connected to the same interface bus. However, the maximum length of cable that can effectively be used to connect a group of instruments should not exceed 2 meters (6.56 ft.) times the number of instruments connected, or 20 meters (65.6 ft.), whichever is less. For a pictorial view of the HP-IB connector and its pin designation, refer to Figure 2-5.

2-21. ADDRESS SELECTION

2-22. 3478A Address. The HP-IB "talk" and "listen" address of the 3478A is set by the multimeter's address switch (located at the rear panel). The talk and listen address is a 5-bit code which is selected to provide a unique address for each HP-IB instrument. The 3478A normally leaves the factory with the address switch set to Decimal Code "23". The corresponding ASCII Code is a listen address code of "7" and a talk code of "W". Refer to Figure 2-6 for the factory address setting of the switch. Refer to the Remote Operation Chapter in Section III of this manual, for more information on addressing and address codes.

2-23. 3478A Talk-Only Mode. The 3478A has a Talk-Only Mode which is selected by the Address Switch. The mode is selected by setting all the address switches (switch 4 to 8) up (on). Refer to the Remote Operation Chapter in Section III of this manual for more information.

2-24. ENVIRONMENTAL REQUIREMENTS

WARNING

To prevent electrical fire or shock hazards, do not expose the instrument to rain or excessive moisture.

2-25. Operating and Storage Temperature

2-26. To meet and maintain the specifications listed in Table 1-1, the 3478A should be operated within ±5°C (±9°F) of the Reference Temperature. The Reference Temperature is the temperature in which the 3478A was last calibrated. For example, if the last Reference Temperature was 23°C (73°F), the 3478A should maintain its specifications if operated within ±5°C (±9°F) of that temperature. The factory temperature is from 18°C to 28°C (64°F to 82°F). The 3478A may be operated within an ambient temperature range of 0°C to 55°C (32°F to 131°F) with less accuracy.

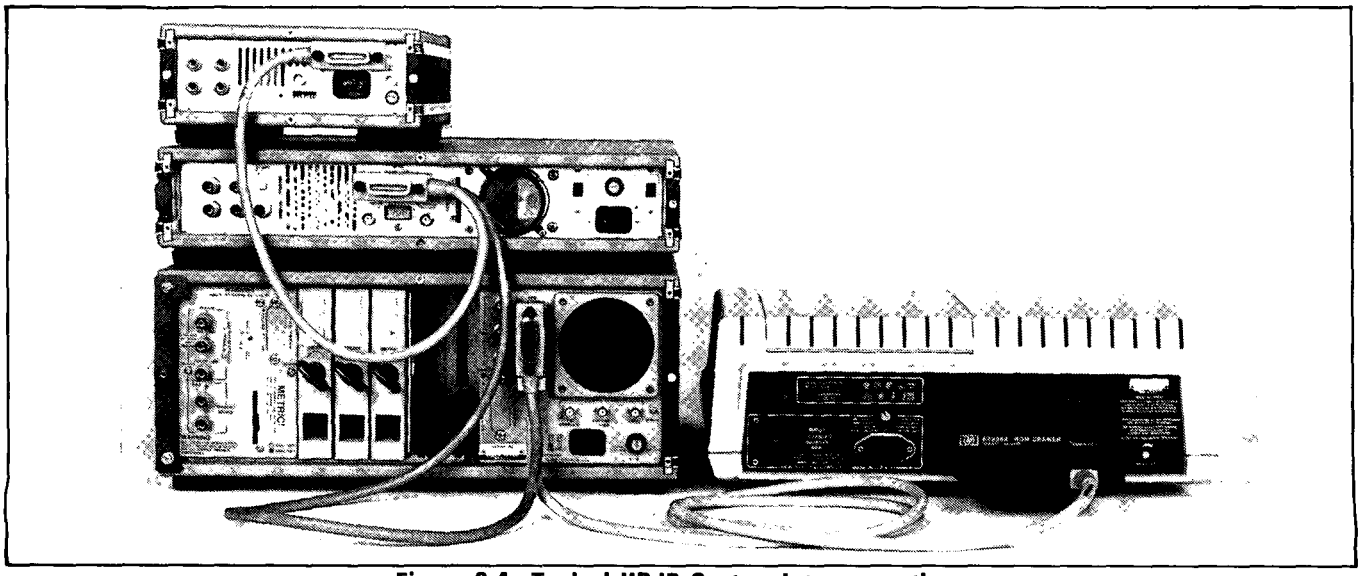

Figure 2-4. Typical HP-IB System Interconnection

PIN	LINE
1	DI01
2	DI02
3	DI03
4	DI04
13	DI05
14	DI06
15	DI07
16	DI08
5	EOI
17	REN
6	DAV
7	NRFD
8	NDAC
9	IFC
10	SRQ
11	ATN
12	SHIELD–CHASSIS GROUND
18	P/O TWISTED PAIR WITH PIN 6
19	P/O TWISTED PAIR WITH PIN 7
20	P/O TWISTED PAIR WITH PIN 8
21	P/O TWISTED PAIR WITH PIN 9
22	P/O TWISTED PAIR WITH PIN 10
23	P/O TWISTED PAIR WITH PIN 11
24	ISOLATED DIGITAL GROUND

THESE PINS ARE INTERNALLY GROUNDED

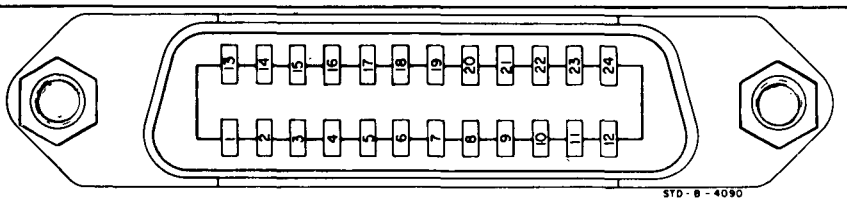

CAUTION

The 3478A contains metric threaded HP-IB cable mounting studs as opposed to English threads. Metric threaded -hp- 10833A, B, or C HP-IB cable lockscrews must be used to secure the cable to the instrument. Identification of the two types of mounting studs and lockscrews is made by their color. English threaded fasteners are colored silver and metric threaded fasteners are colored black. DO NOT mate silver and black fasteners to each other or the threads of either or both will be destroyed. Metric threaded HP-IB cable hardware illustrations and part numbers follow.

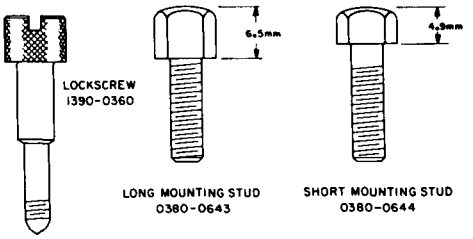

Figure 2-5. HP-IB Connector

2-27. REPACKAGING FOR SHIPMENT

NOTE

If the instrument is to be shipped to Hewlett-Packard for service or repair, attach a tag to the instrument identifying the owner and indicating the required service or repair. Include the model number and full serial number of the instrument. In any correspondence, identify the instrument by model number and full serial number. If you have any questions, contact your nearest -hp- Sales/Service office.

2-28. Place the instrument in its original container with appropriate packaging material and secure with strong tape or metal bands. If the original container is not available, a replacement can be obtained from your nearest -hp- Sales/Service office. Hewlett-Packard suggests that you always insure shipments.

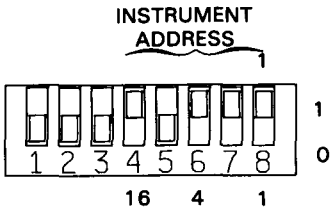

Shown at Factory Default Address (23). This number is called the Primary Address.

Figure 2-6. 3478A Address Switch

2-29. If the original container is not to be used, do the following:

a. Wrap the instrument in heavy plastic, before placing in an inner container.

b. Place packing material around all sides of the instrument and protect the front panel with cardboard strips.

c. Place the instrument in the inner container in a heavy carton. Seal the carton with strong tape or metal bands.

d. Mark shipping container "DELICATE INSTRUMENT", "FRAGILE", etc.

SECTION III
OPERATION

3-1. INTRODUCTION

3-2. This section has the information and instructions for the operation of the 3478A Multimeter, showing front panel and remote operation. The information is an abbreviated description of the operation and is written for a Service Trained Person, rather than an Operator. For more complete operating instructions, refer to the 3478A's Operators Manual. To familiarize yourself with the front and rear panel features or for a review of instrument operations, refer to Figure 3-1.

3-3. The Operation Section is separated into the following major areas: General Information, Front Panel Operation, Shifted Operation, Miscellaneous Operation, and Remote Operation (HP-IB). It is suggested that you read the Remote Operation Chapters last, since you need to know the other operations to understand the remote operations. The major areas are as follows:

a. General Information - paragraph 3-4.

Title	Paragraph
AC Power Operation	3-5
Turn-On	3-7
Display	3-10
Input Terminals	3-12
Input Terminals Cleaning	3-15

b. Front Panel Operation - paragraph 3-17.

Title	Paragraph
DC Volts Measurements	3-18
AC Volts Measurements	3-22
Resistance Measurements	3-26
DC Current Measurements	3-30
AC Current Measurements	3-34
Ranging	3-38
Triggering	3-43

c. Shifted Operation - paragraph 3-50.

Title	Paragraph
General	3-51
Number Of Digits Displayed	3-54
Autozero	3-57
Self-Test/Reset Operation	3-60
Calibration	3-63

d. Miscellaneous Operation - paragraph 3-66.

Title	Paragraph
Voltmeter Complete	3-67

e. Remote Operation - paragraph 3-69.

Title	Paragraph
General	3-70
3478A Response to Bus Messages	3-74
3478A Addressing	3-92
Talk-Only Mode (No Controller)	3-96
3478A HP-IB Programming	3-98
Advanced programming	3-117

3-4. GENERAL INFORMATION

3-5. AC Power Operation

3-6. Before connecting ac power to the 3478A, make sure the power source matches the power requirement of the multimeter (as marked on the rear panel). If the instrument is incompatible with the power source, refer to Section II of this manual for power requirement modification.

3-7. Turn-On

3-8. When the 3478A is first turned on, the multimeter goes through an Internal Test routine. During the test, the instrument displays "SELF TEST" and, when the test is completed and it passes, the instrument displays "SELF TEST OK". If the Self-Test fails, refer to Section VII of this manual for troubleshooting information. For more information on the Self-Test, refer to paragraph 3-60.

NOTE

For 3478As with serial numbers 2301A03760 and below or any instruments that have the Revision B ROM (U502) installed, the instrument displays its remote (HP-IB) address for about one second instead of "SELF TEST OK". The address is displayed as "HPIB ADRS,dd", where "dd" is the address code of the instrument.

3-9. Once the Self-Test is completed, the 3478A goes to its turn-on state which is:

FUNCTION ..... DCV
RANGE ..... AUTO
TRIGGER ..... INTERNAL
AUTOZERO ..... ON
NUMBER OF DIGITS DISPLAYED . . 5

3-10. Display

3-11. The Display is a 12 character alphanumeric Liquid Crystal Display (LCD) with 12 annunciators. The display is normally used to show readings, however, the

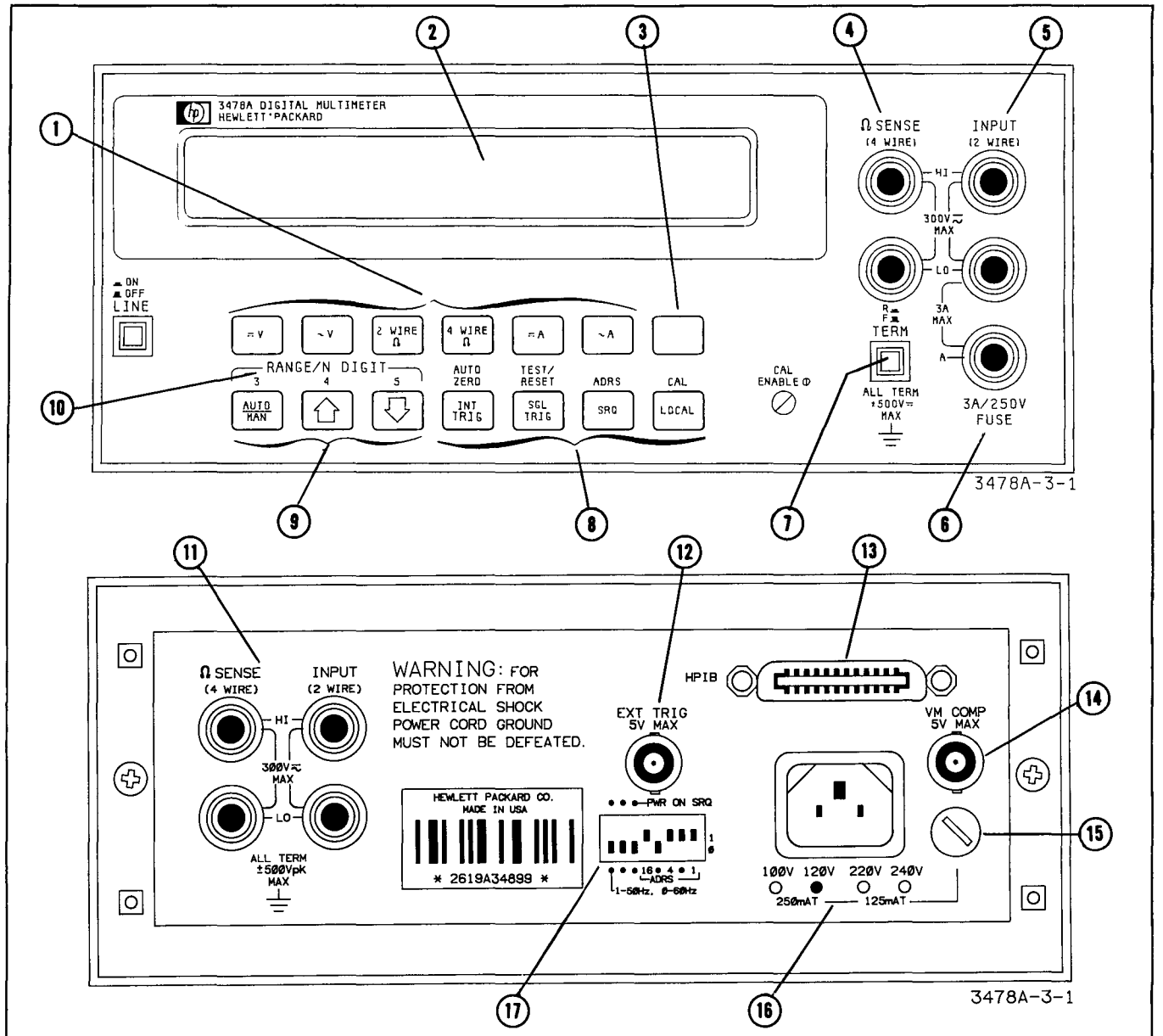

(1) Use the measurement keys along the top row to select the type of measurement you want to make.

(2) The 12 character alphanumeric display includes 12 dedicated annunciators. The display is read directly in engineering units, i.e., MV for milli-volts, MOHM for Meg-ohm resistance, etc.

(3) If the blue key is pressed before another key, the function shown above that key is executed.

(4) These terminals are used for the voltmeter sense leads when making 4-wire ohms measurements.

(5) These terminals are the voltmeter and 2-wire ohms input, 4-wire ohms source current terminals.

(6) This is the Amps input terminal and is used with the INPUT LOW terminal. (3 Amp fuse protected)

(7) When this switch is out, the front panel input terminals are selected. If the switch is in, the rear panel terminals are used.

(8) These keys are used to select special operating features of the 3478A. The blue shift key allows for selecting the "SHIFTED" functions of the bottom row of keys.

The **Internal Trigger** is selected by this key. In this mode, the 3478A triggers itself.

Autozero is a function that allows you to enable or disable the internal zero correction circuitry.

Pressing the **Single Trigger** key causes the 3478A to take one reading and wait for the next trigger impulse. This impulse can come from either the Single Trigger key or the External Trigger input (rear panel BNC).

The **Test/Reset** key performs an internal self test, then resets the 3478A to its turn-on state. Any errors in the self test are noted in the display.

The front panel **SRQ** (Service Request) key is an HP-IB operation that enables you to manually interrupt the controller. This key is enabled by setting the SRQ mask.

Figure 3-1. 3478A Front and Rear Panel Features

The 3478A HP-IB **Address** is displayed when the Address key is pressed.

The **Local** key returns the 3478A to front panel control from the REMOTE mode.

The 3478A features total electronic calibration. The **Cal** key is used as part of that procedure. See Section IV.

(9) The range keys are used to select the proper range for the measurement. Press any of the keys to select the manual range mode. Note the M RNG annunciator in the display. The **Auto/Man** key will return the meter to autorange.

(10) The "SHIFTED" functions of the range keys are used to select alternate numbers of display digits.

(11) The Rear Input Terminals are only used in the DC Volts, AC Volts, and Ohms Functions. They are selected with the Front/Rear Switch in the "in" position.

(12) The External Trigger connector is used to externally trigger the 3478A, when in the Single Trigger mode.

(13) HP-IB Connector.

(14) The Voltmeter Complete Connector outputs a pulse after each measurement cycle.

(15) The Fuse is 250mA for the 100V and 120V operation, or 125mA for the 220V and 240V operation.

(16) The Option Label shows the instrument's power option.

(17) These switches select the 3478A's HP-IB Address, the Power-On SRQ feature, and correct power line frequency (50Hz-60Hz).

Figure 3-1. 3478A Front and Rear Panel Features (cont'd)

display can also show alphanumeric messages (sent remotely). The four characters to the right show the function (and to a certain extent, the range) and the 8 characters to the left show the reading (e.g. +12.3657 MVDC). An "OVLD" is displayed if the input is out of range for the selected range and function.

3-12. Input Terminals

3-13. The 3478A has one set of Input Terminals on the front panel and one set on the rear panel. The front panel terminals consist of an "INPUT HI", "INPUT LO", "Ω SENSE HI", Ω SENSE LO", and "A" (Amps) terminal. Except for the "A" terminal, the rear panel has the same set of terminals. The two sets of terminals are selected by the Front/Rear Switch (located on the front panel). The front terminals are selected with the switch "out" and the rear with the switch "in".

3-14. The INPUT HI and LO Terminals are used for measuring dc volts, ac volts, and resistance in the 2-Wire Ohms configuration. Refer to Figure 3-2 for a typical connection. The Ω SENSE HI and Ω SENSE LO Terminals (in conjunction with the INPUT Terminals) are used in the 4-Wire Ohms configuration. Refer to Figure 3-4 for a typical ohms connection. The A (Amps) Terminal with the INPUT LO Terminal is used to measure ac or dc current. Refer to Figure 3-3 for a typical current connection.

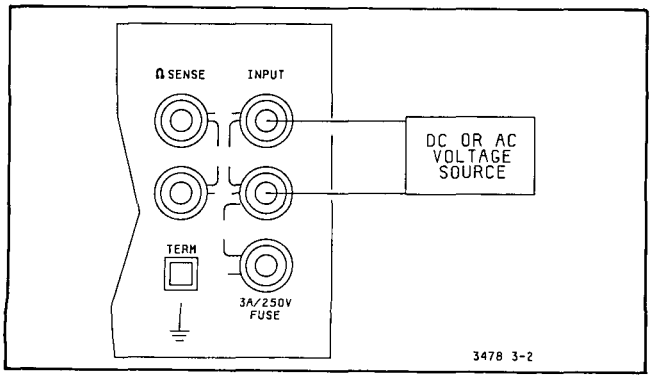

Figure 3-2. Typical Input Measurement Connection

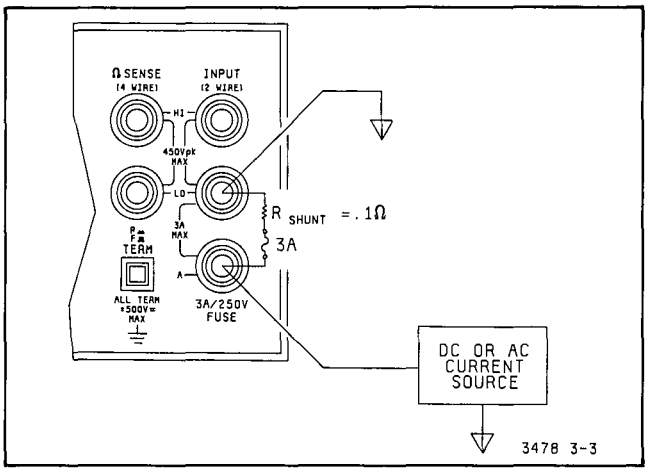

Figure 3-3. Typical Current Measurement Connection

3-15. Input Terminals Cleaning

3-16. The high input impedance of the 3478A requires that the area surrounding the multimeter's Input Terminals (front or rear) must be free of leakage causing paths (e.g. dirt, fingerprints, etc.). The paths can be removed by using a soft cotton swab dipped in isopropyl alcohol.

3-17. FRONT PANEL OPERATION

3-18. DC Volts Measurements

3-19. The 3478A is able to make dc volts measurements from .1uV to 300V in five ranges: 30mV, 300mV, 3V, 30V, and 300V. All ranges are protected from input voltages up to 450V peak. Select the DCV Function for dc volts measurements by pressing the ⎓V button.

3-20. In the DC Volts Function, ranging is done in the Input Circuitry of the 3478A. The result is that the input to the A/D Converter (which changes the voltage to digital information) has the same value in all ranges for

all full scale inputs (e.g. 10V input to the A/D for 30mV, 300mV, 3V, etc. inputs to the 3478A).

3-21. When the DC Volts Function is selected, the right side of the display shows "MVDC" or "VDC", dependent on the range selected. The reading can be displayed either as a 5 1/2, 4 1/2, or 3 1/2 digit reading, dependent on the selected Number Of Digits Displayed (see paragraph 3-54). Refer to Table 1-1 or Table 4-1 for the DC Volts Function's accuracy specifications.

3-22. AC Volts Measurements

3-23. The 3478A uses a True RMS AC to DC Converter to measure ac voltages from 1uV to 300V in four ranges: 300mV, 3V, 30V, and 300V. The response of the converter is from 20Hz to 100KHz on all ranges (to 300KHz on the 30V Range only). All ranges are protected from input voltages up to 450V peak. Select the AC Volts Function for ac volts measurements by pressing the ~V button.

3-24. The AC to DC Converter changes the ac input voltage to dc volts, which is then measured by the 3478A's A/D Converter. All ranging is done in the AC to DC Converter, applying the same voltage value to the A/D Converter for all full scale inputs.

3-25. When the AC Volts Function is selected, the right side of the display shows "MVAC" or "VAC", dependent on the range selected. The reading can be displayed either as a 5½, 4½, or 3½ digit reading, dependent on the selected Number of Digits Displayed (see paragraph 3-54.) A .6 second delay is also applied in the ACV Function before a reading is taken (also, during a range change). Refer to Table 1-1 or Table 4-1 for the AC Volts Function's accuracy specifications.

3-26. Resistance Measurements

3-27. The 3478A is able to make resistance measurements from .0001 ohms to 30M ohms in seven ranges. The ranges extend from the 30 ohm to the 30M ohm range. All ranges are protected from input voltages up to 350V peak. Resistance measurements can be made using either the 2-Wire or 4-Wire ohms configuration, which are selected by the 2 WIRE Ω and 4 WIRE Ω buttons, respectively. Refer to Figure 3-4 for the correct ohms connections.

3-28. Resistance measurements are made by applying a known current (generated by the 3478A) to the unknown resistance. The resultant voltage drop is then measured by the 3478A's dc circuitry (Input Circuitry and A/D Converter). In the 2-Wire Ohms Function, the voltage drop is measured across the HI and LO INPUT Terminals. In the 4-Wire Ohms Function, the voltage is measured across the HI and LO Ω SENSE Terminals. The Ohms Current Source generates the known current which is applied to the unknown resistance (in both

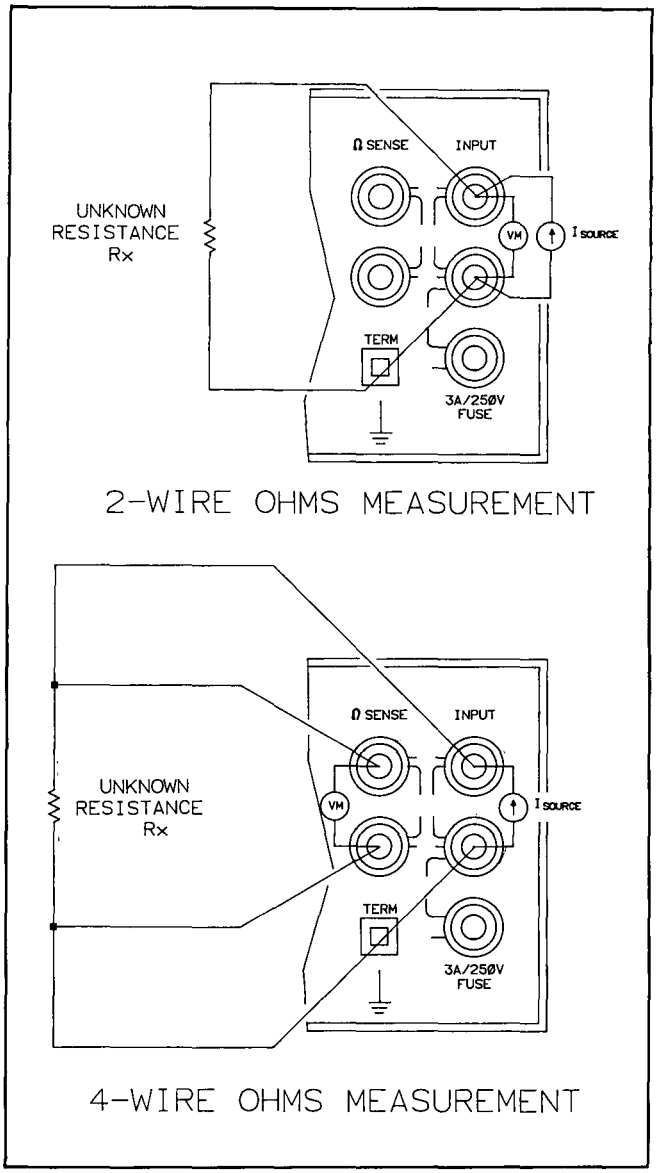

Figure 3-4. Ohms Connections

ohms functions) from the HI INPUT Terminal. The current values are as follows:

Range	Current
30 ohm	1mA
300 ohm	1mA
3K ohm	1mA
30K ohm	100uA
300K ohm	10uA
3M ohm	1uA
30M ohm	.1uA

3-29. When an Ohms Function is selected, the right side of the display shows either "OHM", "KOHM", or "MOHM", dependent on the range selected. In addition, the "2 Ω" annunciator is on for the 2-Wire Ohms Function and the "4 Ω" annunciator is on for the 4-Wire Ohms Function. The ohms reading can be displayed either as a 5 1/2, 4 1/2, or 3 1/2 digit reading,

dependent on the selected Number Of Digits Displayed (see paragraph 3-54). A .03 second or a .3 second delay is also applied before each reading in the 3M ohm and 30M ohm Ranges, respectively. Refer to Table 1-1 or Table 4-1 for the Ohms Function's accuracy specifications.

NOTE

To insure 4-Wire Ohms accuracy when using long leads, it is suggested to keep the lead resistance as follows:

1. *Ohms Sense Lead: < 10K ohms on all ranges*
2. *Ohms LO Source Lead: < 1/30 ohms of full scale on all ranges.*
3. *Ohms HI Source Lead: < 1/30 ohms of full scale on the 3K through 30M ohm ranges and < 3K ohms on the 30 and 300 ohms ranges.*

3-30. DC Current Measurements

3-31. The 3478A can make dc current measurements from 1uA to 3A in two ranges: 300mA and 3A. The ranges are protected from excessive currents and voltages by a 3A 250V fuse. Select the DC Current Function to measure dc currents by pressing the ⎓ A button.

3-32. In the DC Current Function, the current is applied between the INPUT LO and A Terminals. Since a known value resistor (.1 ohm) is connected between the terminals, a voltage proportional to the unknown current and the resistor is generated. This voltage is measured by the 3478A's dc circuitry (Input Circuitry and A/D Converter).

3-33. When the DC Current Function is selected, the right side of the display shows "MADC" or "ADC", dependent on the range selected. The readings can be displayed either as a 5½, 4½, or 3½ digit reading, depending on the selected Number of Digits Displayed (see paragraph 3-54). Refer to Table 1-1 or Table 4-1 for the DC Current Function's accuracy specifications.

NOTE

Current inputs of greater than about 1 amp may cause the current shunt's (.1 ohm Resistor) value to change slightly due to self-heating. This may cause inaccuracies in the measurement. Sufficient time should be allowed for the circuitry to settle after the measurement is complete and before other critical current measurements are made.

3-34. AC Current Measurements

3-35. The 3478A can make ac current measurements from 1uA to 3A in two ranges: 300mA and 3A. The frequency response is from 20Hz to 20KHz. The ranges are protected from excessive currents and voltage by a 3A fuse. Select the AC Current Function to measure ac currents by pressing the ~ A button.

3-36. The AC Current Function is similar to the DC Current Function (see paragraph 3-30); a voltage drop across a resistor is measured. The difference is that the resultant ac voltage is changed from ac to dc using the AC to DC Converter. Similar to the AC Volts Function, all ranging is done in the converter.

3-37. When the AC Current Function is selected, the right side of the display shows "MAAC" or "AAC", dependent on the range selected. The readings can be displayed either as a 5 1/2, 4 1/2, or 3 1/2 digit reading, dependent on the selected Number Of Digits Displayed (see paragraph 3-54). Refer to Table 1-1 or Table 4-1 for the AC Current Function's accuracy specifications.

3-38. Ranging

3-39. The 3478A has two range modes: Manual and Autorange. Manual ranging is selected by pressing the AUTO/MAN button (if the 3478A is in Autorange) or by pressing either the ⇧ or ⇩ buttons. The "M RNG" annunciator on the display then turns on. The following explains the different range modes.

3-40. Uprange. The 3478A upranges to the next higher range each time the ⇧ button is pressed. The highest selectable range depends on the function selected (e.g. 300V for the AC Volts and DC Volts Functions). If a function is selected with its highest range lower than the previous range, the multimeter defaults to the new highest range.

3-41. Downrange. The 3478A downranges to the next lower range each time the ⇩ button is pressed. The lowest selectable range depends on the function selected (e.g. 30mV for the DC Volts Function). If a function is selected with its lowest range higher than the previous function, the multimeter defaults to the new lowest range.

3-42. Autorange. The 3478A selects the optimum range when this mode is selected. The mode is selected when the 3478A is first turned on or by pressing the AUTO/MAN button (if in Manual Range). If Autorange is enabled, the 3478A upranges when the reading is at or above ±303099 and downranges at or below ±027000 (delete one or two zeroes from the numbers for the 4 1/2 and 3 1/2 Digit modes, respectively). The numeric range points are irrespective of decimal placement. Refer to Figure 3-5 for the autorange points (the example is for the DCV Function; other functions are similar).

3-43. Triggering

3-44. The 3478A has three local trigger modes: Internal, Single, and External. In addition to these, a Hold

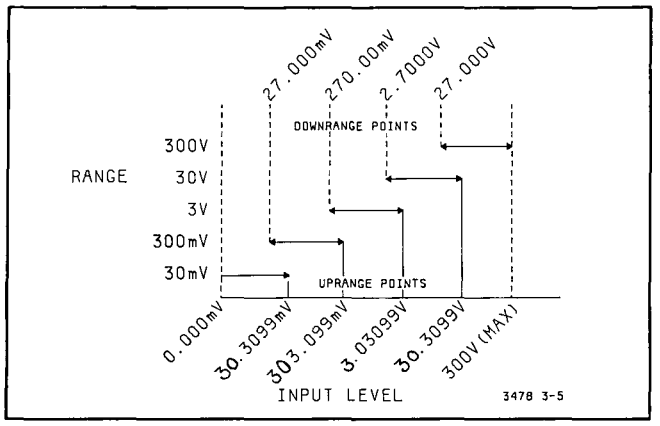

Figure 3-5. Autoranging Points

and a Fast trigger mode can be selected, but only over the HP-IB (remote operation). When the multimeter is triggered, the right most digit on the display blinks (showing that the display is updated). The following paragraphs explain the trigger modes.

3-45. Internal Trigger. In this mode, the measurement cycle is internally initiated and the 3478A makes the measurements at the maximum reading rate. The Internal Trigger is selected at instrument turn on or by pressing the INT/TRIG button.

3-46. Single Trigger. In this mode, a measurement cycle is initiated each time the SGL/TRIG button is pressed. When the button is initially depressed, the 3478A initiates a measurement cycle and then places the multimeter in the Single Trigger Mode. If the button is pressed during a measurement cycle (while in the Single Trigger mode), the 3478A starts a new measurement cycle. When the cycle is completed, a new cycle can then be initiated by pressing the Single Trigger button.

3-47. External Trigger. This mode is selected by pressing the SGL/TRIG button and operates the same as the Single Trigger mode. The difference is that the 3478A can be triggered from the External Trigger input on the rear panel. The input is TTL logic compatible and the trigger pulse should be at least 100nS wide. The 3478A is triggered on the negative edge of the TTL pulse.

3-48. Trigger Hold. In this mode, no triggering is done by the 3478A (no measurement cycle is initiated). This mode can only be selected using the 3478A's remote operation.

3-49. Fast Trigger. This trigger is the same as the Single Trigger except the delays in the ACV and ACI Functions, and high Ohms Ranges are omitted. This trigger can only be selected using the remote operation.

NOTE

When the 3478A is in the Single Trigger mode and an attempt is made to change range or function, the left portion of the display goes blank (except for the decimal point) until another reading is taken (instrument triggered).

3-50. SHIFTED OPERATION

3-51. General

3-52. The Shifted Operation of the 3478A is used to expand the capabilities of the multimeter using the same number of front panel pushbuttons. This is done by using the bottom row of front panel buttons for two different operations, shifted and unshifted. An unshifted operation (AUTO/MAN, INT/TRIG, etc.) is normally selected by pressing a single button. A shifted operation is done by first pressing the blue "SHIFT" button (on the right end of the upper row of buttons) and then pressing one button (on the lower row). To select a new shifted operation, press the blue Shift button again and the button for the new operation. Table 3-1 lists the shifted operations and corresponding buttons. The shifted operations are also shown in blue lettering above the buttons.

3-53. When the blue Shift button is pressed, the "SHIFT" annunciator on the display is on. The annunciator remains on until a different button is pressed.

Table 3-1. Shifted Operations

Shifted Operation	Select Button	Description Of Operation
3 Digit (Disp)	AUTO/MAN	Selects 3 Digits Displayed (see paragraph 3-54).
4 Digit (Disp)	⇧	Selects 4 Digits Displayed (see paragraph 3-54).
5 Digit (Disp)	⇩	Selects 5 Digits Displayed (see paragraph 3-54).
Az	INT/TRIG	Turns Autozero on or off (see paragraph 3-57).
Test/Reset	SGL/TRIG	Places the 3478A into its Internal Test Mode (see paragraph 3-61).
Adrs	SRQ	Displays the 3478A's current HP-IB Address Code (see paragraph 3-92).
Cal	LOCAL	Places the 3478A into the calibration mode (see Section IV of this manual).

3-54. Number Of Digits Displayed

3-55. The 3478A can display readings in either 5 1/2, 4 1/2, or 3 1/2 digits. The 5 1/2, 4 1/2, and 3 1/2 digits can be selected by first pressing the blue Shift button and then either the AUTO/MAN, ⇧, or ⇩ button, respectively.

3-56. The Number Of Digits Displayed affects the reading rate of the multimeter. This is because the number of digits determines the integration time of the A/D Converter. In the 4 1/2 digit mode, the integration

time is 1/60 second (or 1/50 second for the 50Hz option), which is called 1 PLC (Power Line Cycle). In the 3 1/2 digit mode, the time is 1/600 second (or 1/500 second for the 50Hz option) which is .1 PLC. In the 5 1/2 digit mode, the 3478A takes 10 readings using the 4 1/2 digit mode and averages them together for an extra digit of resolution. This takes a time of 1/6 second (or 1/5 second in the 50 Hz option) which is 10 PLC. For more information on run-up time and the A/D Converter, refer to this manual's Section VII (Service Group F, A/D Converter theory of operation).

3-57. Autozero

3-58. The Autozero Function of the 3478A is used to compensate for offsets that may be present in the multimeter's internal circuitry (DC/Ohms Input Amplifier, A/D Converter, etc). The method used is to temporarily connect the input of the amplifier to ground (the INPUT LO Terminal) and make a measurement (the INPUT HI Terminal is open at this time). The offset reading is then stored into the 3478A's internal memory. After that, the short is removed and a regular input measurement is made. The offset reading is then subtracted from the input reading and the compensated reading is displayed.

3-59. The Autozero Function is enabled when the 3478A is turned on and after doing a Self-Test (see paragraph 3-60). The feature can be disabled by pressing the blue Shift button and then the INT/TRIG button. The "AZ OFF" annunciator on the display will light, showing that the function is off. After the function is turned off, the multimeter immediately takes an offset reading and stores it into memory. This last reading is then subtracted from the input measurements that follow. Since no more offset readings are taken, the reading rate of the 3478A is faster (up to twice as fast). If a range, function, or digit change is made, or an attempt is made to calibrate the 3478A, a new offset reading is taken. With Autozero off, the 3478A's input circuitry remains in a static state. This is useful when making measurements in extremely high impedance circuits where the internal switching transients of the 3478A may affect the reading accuracy.

NOTE

The 3478A's long term stability may be affected if the Autozero feature is disabled.

3-60. Self-Test/Reset Operation

3-61. The 3478A uses an Internal Self-Test to check its display and internal circuitry. The multimeter goes through the test at turn-on and also when the Self-Test is selected. The test can be selected by pressing the blue Shift button and then the SGL/TRIG button. When the test is selected from the front panel, all the segments of the display are on except are on as long as the test button is pressed. After that, "SELF TEST" will be displayed during the time of the test. When the test is completed, "SELF TEST OK" will be displayed (if the test passes). The 3478A then resets to its turn-on state (see paragraph 3-9), not the previous state before the test was selected. For 3478As with serial numbers 2301A03760 and below or any instruments that have the Revision B ROM (U502) installed, the instrument turns on all the segments in the display for about five seconds. The display then may show a certain message for about 1/4 second. When the Self-Test is completed, the multimeter's displays its remote (HP-IB) address for about one second. The address is displayed as "HPIB ADRS,dd", where "dd" is the address code of the instrument.

3-62. If the Self-Test fails, an error message will be displayed indicating the type of failure. If there are multiple failures, only one failure will be displayed. The 3478A then attempts to operate normally (even if a test fails). If another failure is noted while trying to operate normally, the new failure will be displayed. This continues until the test(s) passes or the instrument is taken out of the Self-Test mode.

Table 3-2. 3478A Error Messages

Error Message	Definition
U.C. RAM FAIL	The 3478A has failed its internal RAM self test
U.C. ROM FAIL	The 3478A has failed its internal ROM self test indicating an error in the ROM
CAL RAM FAIL	An attempt to write to the Calibration CMOS RAM was unsuccessful
UNCALIBRATED	The Calibration CMOS RAM has an incorrect checksum showing that calibration is needed
A:D LINK FAIL	The internal CPU (A/D Controller) is unable to communicate with the A/D Converter
A:D SLOPE ERR	The A/D Converter is unable to do a proper conversion
A:D TEST FAIL	The A/D Converter has failed its self-test.

3-63. Calibration

3-64. The 3478A does not have any adjustments to calibrate the instrument; calibration is done electronically. A known good calibration source is applied to the multimeter and the value of the known source is entered into the instrument. A reading is then taken and compared with the value entered. A Calibration Constant is calculated (from the entered value) to correct the reading to the known value, and then stored into memory. The correct readings are calculated using the constants and then displayed.

3-65. There are two steps in calibrating the 3478A. First, the front panel Calibration Switch has to be set to

CAL/ENABLE. Second, the blue Shift button and the LOCAL (CAL) button have to be pressed for each calibration step (e.g. press the buttons for the DC Volts Function's zero calibration and press the buttons again for the function's full scale calibration). Refer to Section IV of this manual for the calibration procedures.

NOTE

The CAL ENABLE Switch on the front panel should not be in the CAL/ENABLE position under normal use. It should only be in that position to calibrate the instrument.

3-66. MISCELLANEOUS OPERATIONS

3-67. Voltmeter Complete

3-68. The Voltmeter Complete connector is a BNC connector which outputs a signal at the end of the A/D cycle. The signal is a negative going TTL compatible pulse with a time period of approximately 1μS. The Voltmeter Complete connector is located on the rear panel.

3-69. REMOTE OPERATION

3-70. General

3-71. The following paragraphs gives device dependent information necessary to remotely operate the 3478A over the Hewlett-Packard Interface Bus (HP-IB). Directions for mechanical interface connections to the HP-IB are given in Section II of this manual. Familiarize yourself with the front panel operation (local) before attempting to use the multimeter in remote (HP-IB).

NOTE

HP-IB is Hewlett-Packard's implementation of IEEE Std. 488-1978, "Standard Digital Interface for Programmable Instrumentation" and ANSI MC 1.1.

3-72. A general description of the HP-IB is in this manual's Appendix A. Refer to the appendix for any non-3478A related HP-IB information. It is assumed, in the following paragraphs, that you are knowledgeable about the HP-IB.

3-73. The following lists the different 3478A remote operations.

a. 3478A Response to Bus Messages (paragraph 3-74).

Title	Paragraph
Data	3-76
Trigger (GET)	3-77
Clear (DCL or SDC)	3-78
Remote	3-79
Local	3-80
Local Lockout	3-81
Clear Lockout and Set Local	3-82
Require Service (SRQ)	3-83
Status Byte	3-85
Status Bit	3-89
Pass Control	3-90
Abort	3-91

b. 3478A Addressing (paragraph 3-92) and Talk-Only Mode (paragraph 3-96).

c. 3478A HP-IB Programming (paragraph 3-98).

Title	Paragraph
General	3-99
Program Codes	3-101
Programming the SRQ Mask	3-103
Clearing Status Register (Status Byte)	3-105
Power-On SRQ	3-106
Sending Data to the Display	3-107
Home Commands	3-110
Reading Data from the 3478A	3-111
Front/Rear Switch Position	3-113
Data Ready Feature	3-114
Front Panel SRQ	3-115
Fast Trigger	3-116

d. Advanced Programming (paragraph 3-117).

Title	Paragraph
General	3-118
Extended Ohms Operation	3-119
Reading the Binary Status Byte	3-120
Reading the Error Register	3-121

3-74. 3478A Response to Bus Messages

3-75. The following paragraphs explain the 3478A's response to Bus Messages. The multimeter's Bus capabilities are in Table 3-3.

Table 3-3. 3478A's Bus Capabilities

Mnemonic	Interface Function Name
SH1	Source Handshake Capability
AH1	Acceptor Handshake Capability
T5	Talker (Basic Talker, Serial poll, Talk Only Mode, Unaddressed to Talk if Addressed to Listen)
L4	Listener (Basic Listener, Unaddressed to Listen if Addressed to Talk)
LE0	No Extended Listener
TE0	No Extended Talker
SR1	Service Request Capability
RL1	Remote/Local Capability with Local Lockout
PP0	No Parallel Poll Capability
DC1	Device Clear Capability
DT1	Device Trigger Capability
C0	No Controller Capability

3-76. Data. The Data Message is used to transfer information between the 3478A and the controller.

a. The message is used to send data to the multimeter and consists primarily of set-up information (e.g. DC Volts, 30V Range, etc.). The 3478A is the Listener and the controller is the Talker.

b. The message is also used by the controller to receive data from the 3478A. This includes the multimeter's output (readings) and status information. In this case, the 3478A is the Talker and the controller is the Listener.

3-77. Trigger (GET, Group Execute Trigger). The Trigger message causes the 3478A to initiate a measurement cycle. It is an HP-IB Trigger and triggers the multimeter in any trigger mode, since it has priority over the other trigger modes. If the 3478A is triggered during a measurement cycle, the cycle is aborted and a new cycle is initiated. There may be a delay (up to .5 sec) if a cycle is in progress when the trigger is received. The multimeter has to be programmed to "listen" to execute the trigger.

3-78. Clear (DCL or SDC: Device Clear or Selective Device Clear). A Clear places the 3478A into its turn-on routine (see paragraph 3-7). In addition, the multimeter's address switch (see paragraph 3-92) is read and the SRQ Mask is set to zero or octal 200 (if the Power-On SRQ switch is on, see paragraph 3-106). If during the turn-on routine an error is detected, the hardware error bit in the serial poll register is set.

3-79. Remote. The Remote Message allows the 3478A to be controlled over the HP-IB. In remote, the front panel buttons, except the LOCAL and Front Panel SRQ buttons, are disabled. The Local and Front Panel SRQ buttons are only disabled when the 3478A is in remote and local lockout (see paragraph 3-81). The instrument state in remote is determined by the local state before being placed in remote. The RMT annunciator on the display will also be on with the 3478A in remote.

3-80. Local. This message clears the remote operation of the 3478A and enables its front panel operation. Pressing the front panel LOCAL button also places the multimeter in the local state (if the button has not been disabled by the Local Lockout Message, see next paragraph).

3-81. Local Lockout. All the front panel buttons are disabled with this message, if the 3478A is in remote. The message is in effect until cleared over the HP-IB or power is cycled.

3-82. Clear Lockout and Set Local. This message placed the 3478A into local and the Local Lockout Message is cleared.

3-83. Require Service (SRQ). The Require Service Message (SRQ Message) is independent of all other HP-IB activity and is sent on a single line called the SRQ Line. Its state is either true or false (low = true and high = false). The 3478A must be programmed to send the SRQ Message. This is done by programming the SRQ Mask (see paragraph 3-103). The front panel SRQ annunciator is on when the 3478A requires service.

3-84. Since more than one device (on the same Bus) can output the SRQ Message, the devices can be polled by the controller (by a Serial Poll) to determine if the 3478A (or another device) requires service. The 3478A then outputs a Status Byte (see paragraph 3-85) which shows for what reason the multimeter requires service.

3-85. Status Byte. The Status Byte is output by the 3478A in response to a Serial Poll. The message has the same information as the 3478A's Status Register (see next paragraph), and sets the corresponding bit true for any true SRQ condition shown in Table 3-4 (whether the SRQ Mask is set or not). The bit is represented in Figure 3-6.

3-86. The 3478A can require service if any condition in Table 3-4 is true. Since the SRQ Mask must be set to output the Require Service Message (except for bit 7, which is set by the Power-On SRQ switch), the 3478A's Status Register is used to monitor the conditions. This way, only the condition that is set by the mask outputs the SRQ Message. Other true conditions that can cause an SRQ Message, but which are not set by the SRQ Mask, remain in the Status Register as a true condition. They will not cause the SRQ Message to be output. For example, suppose the Front Panel SRQ condition is the only one set in the SRQ Mask. If the Data Ready condition is true, but not Front Panel SRQ, no SRQ Message

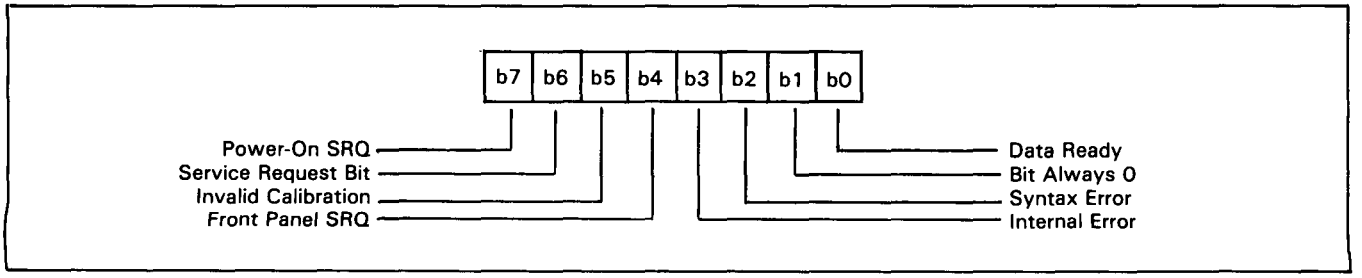

Figure 3-6. Status Byte

Table 3-4. Status Byte Definitions

Octal Code	Decimal Code	Bit	Definitions
001	1	0	Data Ready - Indicates to the controller that measurement data is ready to be output. The Require Service Message and bit is cleared when the controller begins to accept the data or when the reading is no longer available. See paragraph 3-114.
002	2	1	This bit is always at 0 (0 = high).
004	4	2	Syntax Error - This shows that an invalid Program Code(s) has been sent to the 3478A (e.g. F9).
010	8	3	Internal Error - Shows that a failure in the 3478A is detected. This may be a failure in the Self-Test Routine (see paragraph 3-60), the A/D Converter, or a checksum error in the Calibration RAM (checked every time a reading is taken). More information can be obtained by reading the 3478A's error register. See paragraph 3-120.
020	16	4	Front Panel SRQ - This bit is set when the 3478A's Front Panel SRQ button is pressed. See paragraph 3-115.
040	32	5	Invalid Calibration - When this bit is set, an attempt to calibrate the 3478A has failed.
100	64	6	This is the SRQ bit. This bit is true only if a Require Service Message is output.
200	128	7	Power-On SRQ - Shows that a power-on reset has occurred. See paragraph 3-106.

Note: More than one bit in the Status Byte can be true (see paragraph 3-87).

is output (the Status Register's Data Ready bit is true). The only way the SRQ Message is output is if the Front Panel SRQ condition is true.

3-87. More than one bit in the Status Byte Message can be true. For example, bit 0, 2, and 4 are true (remember, bit 6 is true for any SRQ condition, if the SRQ Mask is set for the condition) making the resultant Status Byte look like the following:

b7							b0
0	1	0	1	0	1	0	1

NOTE

A "1" in this example shows a true condition.

3-88. The byte is output as shown in the previous example with the corresponding octal number of the example at 125 shown as follows:

01 010 101
└── 125 ──┘

3-89. Status Bit. The 3478A does not respond to a Parallel Poll. The Status Bit is used only for Parallel Poll and should not be confused with the bits in the Status Byte Message.

3-90. Pass Control. The 3478A does not have controller capabilities.

3-91. Abort (Interface Clear). All HP-IB communication is terminated (including the 3478A's Bus communication). Control is returned to the controller. The Abort Message does not remove the 3478A from remote control.

3-92. 3478A Addressing

3-93. HP-IB requires that each device on the Bus needs to be identified as a Listener or a Talker, in order to execute the Bus Messages and commands. Because of this, each device has its own unique "listen" and "talk" address. The address of the 3478A is set by the Address Switch on its rear panel. Setting the 3478A's Listen Address also sets its Talk Address.

3-94. The address switch is an eight section "DIP" switch with five sections used for addressing. The switch is shown in Table 3-5. The allowable address settings are also listed in Table 3-5. The factory address setting of the 3478A is decimal 23 (refer to Section II of this manual for the switch setting).

3-95. Instrument address commands (sent by the controller) are usually in this form: universal unlisten, device talk, device listen. The universal unlisten command removes all listeners from the Bus to allow only the addressed listener(s) to receive data. The data is sent by a talker which is designated by the device talk command.

3-96. Talk-Only Mode (No Controller)

3-97. The 3478A's Talk-Only Mode allows the multimeter to send measurement data to an external device (like a printer) without a Bus controller. The multimeter is placed into the Talk-Only Mode by setting the five address switches (on the rear panel "DIP" switch) to 1 (set only the five address switches to the up position). Measurement data is then output after each trigger. Function and range settings are selected from the front panel.

Table 3-5. 3478A Address Codes

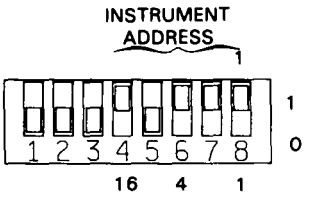

Shown at Factory Default Address (23). This number is called the Primary Address.

ASCII Code Character		Address Switches					5-bit
Listen	Talk	A5	A4	A3	A2	A1	Decimal Code
SP	@	0	0	0	0	0	00
!	A	0	0	0	0	1	01
"	B	0	0	0	1	0	02
#	C	0	0	0	1	1	03
$	D	0	0	1	0	0	04
%	E	0	0	1	0	1	05
&	F	0	0	1	1	0	06
'	G	0	0	1	1	1	07
(	H	0	1	0	0	0	08
)	I	0	1	0	0	1	09
*	J	0	1	0	1	0	10
+	K	0	1	0	1	1	11
,	L	0	1	1	0	0	12
–	M	0	1	1	0	1	13
.	N	0	1	1	1	0	14
/	O	0	1	1	1	1	15
0	P	1	0	0	0	0	16
1	Q	1	0	0	0	1	17
2	R	1	0	0	1	0	18
3	S	1	0	0	1	1	19
4	T	1	0	1	0	0	20
5	U	1	0	1	0	1	21
6	V	1	0	1	1	0	22
7	W	1	0	1	1	1	23
8	X	1	1	0	0	0	24
9	Y	1	1	0	0	1	25
:	Z	1	1	0	1	0	26
;	[	1	1	0	1	1	27
<	\	1	1	1	0	0	28
=	]	1	1	1	0	1	29
>	~	1	1	1	1	0	30

3-98. 3478A HP-IB Programming

3-99. General. The following paragraphs explain how to program the 3478A over the HP-IB. The information is given using the HP-IB format, rather than controller dependent language. If the information is desired using controller dependent language, refer to the 3478A's Operator's Manual.

3-100. Programming the 3478A is done by DATA messages. Set-up information (Range, Function, etc.) is DATA sent by the controller and is done using program codes. The DATA received by the controller (from the 3478A) is measurement data, and other data like the Status Byte and the five bytes from the Output Binary Status Byte.

3-101. Program Codes. All the program codes for the *3478A are listed in Table 3-6.* The 3478A must be in "remote" and "listen" to receive the codes (the RMT and LSTN annunciators are on when the 3478A is in remote and listening). An example is as follows:

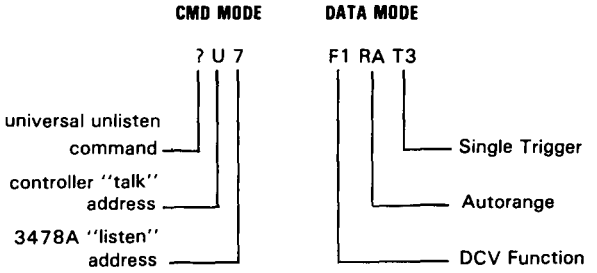

3-102. The Program Codes are a series of 7-bit ASCII characters (the parity bit is ignored). All lower case characters, spaces, commas, and semicolons are ignored (they may be used with the codes as separators). All null characters, carriage return, line feed, form feed, vertical tab, and horizontal tab characters are also ignored. Other characters which are not included in Table 3-6, cause a Syntax Error (bit 2 in the Status Register set). In addition, a Syntax Error is caused if the characters are sent in a different order than shown in the table (e.g. "1F" causes a Syntax Error).

CAUTION

Do not send program codes "W" and/or "X" to the 3478A. These codes can, under certain conditions, uncalibrate the instrument. The letters "W" and "X" can, however, be sent behind program codes "D2" or "D3" (which are used to send text to the display; see paragraph 3-107).

3-103. Programming the SRQ Mask. The SRQ Mask must be set for the 3478A to output a Require Service Message. Setting the SRQ Mask will not set the bits in the Status Byte; these bits are automatically set (except bit 6) when any corresponding require service condition is true. For example, you wish to know if the multimeter has received an incorrect program code (Syntax Error) or has an internal failure (Internal Error). If the conditions are true, bits 2 and 3 of the Status Byte are set; but no Require Service Message is output. The message will not be output until the SRQ Mask is set to the corresponding bits of the Status Byte (which are are bits 2 and 3). Since the mask is to be set in octal, the resultant code for the bits is "14". The mask is set by sending "Mdd", where dd is the octal code for the bits. This is shown in the following example.

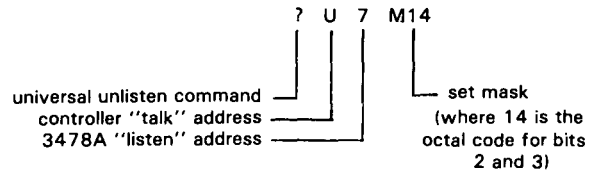

3-104. Only bits 0 to 5 can be set by programming the SRQ Mask. Bit 6 of the Status Byte is set whenever the Require Service Message is output and bit 7 is set by the Power-On SRQ switch on the rear panel (see paragraph 3-106). Because of this, only a two digit octal code (00

Table 3-6. 3478A Program Codes

Type	Program Code	Description
FUNCTION	F1	DC Volts
	F2	AC Volts
	F3	2-Wire Ohms
	F4	4-Wire Ohms
	F5	DC Current
	F6	AC Current
	F7	Extended Ohms (see paragraph 3-118).
RANGE	R-3	most sensitive range on any function
	R-2	30mV DC, or most sensitive range on any other function
	R-1	300mV DC, 300mV AC, 300mA DC, 300mA AC, or most sensitive range on any other function
	R0	3V DC, 3V AC, 3A DC, 3A AC, or most sensitive range on any other function
	R1	30V DC, 30V AC, 30 Ohm, or most sensitive range on any other function
	R2	300V DC, 300V AC, 300 Ohm, or least sensitive range on any other function
	R3	3K Ohm or least sensitive range on any other function
	R4	30K Ohm or least sensitive range on any other function
	R5	300K Ohm or least sensitive range on any other function
	R6	3M Ohm or least sensitive range on any other function
	R7	30M Ohm or least sensitive range on any other function.
	RA	Autorange
DIGITS DISPLAYED	N3	3 1/2 Digits Displayed
	N4	4 1/2 Digits Displayed
	N5	5 1/2 Digits Displayed
TRIGGER	T1	Internal Trigger
	T2	External Trigger
	T3	Single Trigger
	T4	Hold Trigger
	T5	Fast Trigger (see paragraph 3-116)
AUTOZERO	Z0	Autozero Disabled
	Z1	Autozero Enabled
DISPLAY	D1	Normal Display Operation
	D2	Display Text and update Annunciators
	D3	Display Text and turn off Annunciators
HOME COMMAND	H0	Equivalent to "F1T4R-2RAZ1N4"
	H1	Equivalent to "F1R-2RAZ1N4T3"
	H2	Equivalent to "F2R-2RAZ1N4T3"
	H3	Equivalent to "F3R-2RAZ1N4T3"
	H4	Equivalent to "F4R-2RAZ1N4T3"
	H5	Equivalent to "F5R-2RAZ1N4T3"
	H6	Equivalent to "F6R-2RAZ1N4T3"
	H7	Equivalent to "F7R-2RAZ1N4T3"
MISC. COMMANDS	B	Read Status of the 3478A in Binary. See paragraph 3-119.
	C	Calibrate (see Section IV of this manual)
	E	Read the Error Register. See paragraph 3-120.
	K	Clears Status Register
	M	Set SRQ Mask (Mdd, where dd is the octal code of the bits)
	S	Front/Rear Switch Position (0 = Rear, 1 = Front)

77) can be sent to program the mask. The mask can be cleared by sending: "M00". Remember, the mask is only set to output a Require Service Message (not the Status Byte) for a certain SRQ condition.

3-105. Clearing Status Register (Status Byte). Bits 2 through 5 and 7 of the register can be cleared by sending program code "K", and by a device CLEAR message. Bit 0 (Data Ready) is not cleared since it represents the 3478A's current status (the bit is cleared when the 3478A outputs its reading). Bit 6 is the SRQ bit which can be cleared by a Serial Poll or if the SRQ Mask is set to 00.

3-106. Power-On SRQ. This feature is enabled by setting the Power-On SRQ switch to On (switch #3 on the rear panel in the up position). When the feature is enabled, the 3478A Requires Service (generates an SRQ) each time power is cycled or a reset condition is generated by the instrument (e.g. due to an instrument failure or selecting the Self-Test).

3-107. Sending Data to the Display. Up to 12 ASCII characters can be displayed at a time by the 3478A's display. The legal characters are decimal 32 through 95 of the 128 ASCII characters. Only upper case letters and numbers can be displayed. Lower case letters generate characters which do not resemble the letters. Commas, periods, and semicolons can go between characters. The ASCII characters can be sent in two different modes. The following paragraphs explain the two modes.

3-108. In one display mode, the display is continuously updated. This is enabled by program code "D2" (e.g. "D23478A DMM" where "3478A DMM" is the message displayed). In this mode, the annunciators continue to be updated. If more than 12 characters are sent to the display, the extra characters are ignored until a control character is received. If the control character is different than HT (Horizontal Tab), VT (Vertical Tab), LF (Line Field), CR (Carriage Return), or FF (Form Feed), a Syntax Error is generated. A "D2" code locks the display until a "D1" (Selects Normal Display) is sent, a CLEAR message is sent, an error condition occurs, or a front panel button is pressed.

3-109. The other display mode is selected by sending code "D3". This mode is the same as the previous mode, except the display is not updated and all annunciators are turned off. The text on the display remains on for about 10 minutes and then the display goes blank. The display can be restored by sending any of the display codes (D1, D2, or D3) or by pressing the LOCAL button (if not disabled by the LOCAL LOCKOUT Message).

3-110. Home Commands. The Home Commands (when sent to the 3478A over the HP-IB) are used to set the 3478A into a predefined operating state. The program code is "Hn", where n is the number which

defines the state. The following lists the home commands and the corresponding operating states.

a. H0 Command. The instrument state for this command is as follows:

Function	DCV	(F1)
Range	30mV, Auto	(R-2RA)
Trigger	Hold	(T4)
Number of Digits Displayed	4 1/2	(N4)
Autozero	On	(Z1)

In addition, the 3478A's External Trigger is disabled and the instrument is set into the lowest range (R-2) before Autorange is selected. Also, any data (reading) output to the Bus or the front panel is erased when the home command is sent. The corresponding program codes of the instrument state are: "F1T4R-2RAZ1N4".

b. H1 Command (DCV). This command is the same as the "H0"command, except a trigger occurs and the resultant output can be read. The corresponding program codes are: "F1R-2RAZ1N4T3".

c. H2 Command (ACV). The same as the "H1" command, except the selected function is AC Volts. The corresponding program codes are: "F2R-2RAZ1N4T3".

d. H3 Command (2-Wire Ohms). Same as the "H1" command, except the selected function is 2-Wire Ohms. The corresponding program codes are: "F3R-2RAZ1N4T3".

e. H4 Command (4-Wire Ohms). Same as the "H1" command, except the selected function is 4-Wire Ohms. The corresponding program codes are: "F4R-2RAZ1N4T3".

f. H5 Command (DCI). Same as the "H1" command, except the selected function is DC Current. The corresponding program codes are: "F5R-2RAZ1N4T3".

g. H6 Command (ACI). Same as the "H1" command, except the selected function is AC Current. The corresponding program codes are: "F6R-2RAZ1N4T3".

h. H7 Command (Ext. Ohms). Same as the "H1"command, except the selected function is Extended Ohms (see paragraph 3-119). The corresponding program codes are: "F7R-2RAZ1N4T3".

3-111. Reading Data from the 3478A. Data in the form of readings can be output by the 3478A over the HP-IB (other data that can be output is discussed in later paragraphs). To output a reading (if available), the 3478A has to be addressed to "talk". The readings are output using 13 ASCII characters and are in the following form:.

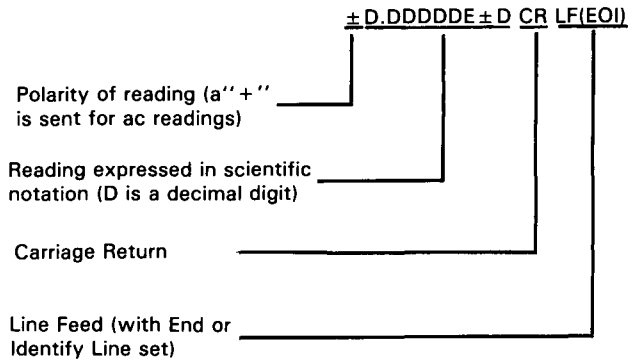

3-112. Each character in the output statement (except EOI) is one byte, which adds up to 13. The exponent will be in engineering notation (E-3, E+0, E+3, or E+6) and the mantissa will always have 1, 2, or 3 digits before the decimal point (D.DDDDD, DD.DDDD, or DDD.DDD). If the 3478A is in the 4 1/2 or 3 1/2 Digit mode, the 5th and/or 6th digits will be output as zeroes. An overload condition (whether plus or minus) will be output as: +9.99999E+9. If a different output is requested (Binary, Front/Rear Switch position, etc.), the other output supercedes the reading. If a data transfer is interrupted while being output, the 3478A continues the output wherever it left off, when addressed again. This partial output (or any output) can be disabled by a Group Execute Trigger (GET), Clear Message (DCL or SDC), sending any valid program code, or pressing the LOCAL, Shift, and TEST/RESET buttons on the front panel.

3-113. Front/Rear Switch Position. The 3478A's Front/Rear Switch position can be remotely determined by sending program code "S" to the multimeter and then reading its output. If "0" (CR LF) is output the switch is set to Rear, and if "1" (CR LF) is output the switch is set to Front.

3-114. Data Ready Feature. The Data Ready feature of the 3478A, when enabled, outputs a Require Service Message (SRQ) after each completed measurement cycle. Before the message can be output, bit 0 of the SRQ Mask must be set. This is done by sending program code "M01" (bit 0 of the Status Byte and Status Register). When the Require Service Message is sent, the front panel "SRQ" annunciator turns on and bit 0 of the Status Byte is set. The SRQ condition remains until the data is read by the controller, or a Serial Poll is done.

3-115. Front Panel SRQ. The Front Panel SRQ feature of the 3478A outputs a Require Service Message (SRQ) each time the Front Panel SRQ button is pressed. Before the message can be output, bit 4 of the SRQ Mask must be set. This is done by sending program code "M20" (bit 4 of the Status Byte and Status Register). Once this is done, the Require Service Message will be output and the front panel SRQ annunciator turns on, whenever the SRQ button is pressed. The SRQ condition remains until a Serial Poll is done by the controller.

3-116. Fast Trigger. This trigger mode can only be selected over the HP-IB. It is the same as the Single Trigger, except the delays in the AC Volts Function, AC Current Function, and the high Ohms Ranges are omitted. The mode can be selected by sending program codes "T5".

3-117. Advanced Programming

3-118. General. The following paragraphs have advanced programming information for the 3478A. It includes Extended Ohms Operation, Reading the Binary Status Byte, and Reading the Error Register.

3-119. Extended Ohms Operation. This operation (or function) is only available over the HP-IB and is used to measure resistance above 30M ohm. The function is selected by sending program code "F7" or "H7" (Home Command, see paragraph 3-110). The 3478A is set to the 2-Wire Ohms Function and the 30M ohm Range. A 10M ohm resistor is connected in parallel with the input. Measure the resistance first and then measure the unknown resistance. The unknown resistance can then be calculated by this formula:

$$Rx = \frac{Ri * Rt}{Ri - Rt}$$

where Rx is the unknown resistance, Ri is the measured 10M ohm resistor, and Rt is the measured value of the parallel combination.

3-120. Reading the Binary Status Byte. The current status (or state) of the 3478A can be determined by reading its Binary Status Byte. The total number of bytes is five, with each byte 8 bits wide. The bytes can be read by sending program code "B" to the 3478A and then reading its output. A small program to read the output using the -hp- Model 85 Personal Computer is as follows:

```
10 OUTPUT 723 ;"B"
20 ENTER 723 USING "5(1B)" ;B1,B2,B3,B4,B5
```

The bytes are in variables B1, B2, B3, B4, and B5. The bytes and corresponding meanings of the bits (when true) are in Table 3-7. Program Code "B" clears the Error Register (byte 4; see Table 3-7).

3-121. Reading the Error Register. Besides using Binary Status Byte 4 (see previous paragraph), the status of the Error Register can also be determined by sending program code "E" to the 3478A and then reading its output. The output is a two digit octal number followed by a carriage return and line feed. The number shows which bit(s) of the register is true (a two digit number can be used since only 6 bits are used by the register). For example, bits 0 and 5 are true which results in octal "41" (the maximum value is "77"). Refer to Table 3-7 (byte 4) for the definitions of the bits. The Error Register is also cleared by sending program code "E".

Table 3-7. Binary Status Byte Definition

Byte #		Definition
1	Bits True	Function, Range, and Number Of Digits Displayed
	XXXXXX01	5 1/2 Digits Displayed
	XXXXXX10	4 1/2 Digits Displayed
	XXXXXX11	3 1/2 Digits Displayed
	XXX001XX	30mV DC, 300mV AC, 30 Ohm, 300mA AC or DC, or Extended Ohms Ranges
	XXX010XX	300mV DC, 3V AC, 300 Ohm, 3A AC or DC Ranges
	XXX011XX	3V DC, 30V AC, 3K Ohm Ranges
	XXX100XX	30V DC, 300V AC, 30K Ohm Ranges
	XXX101XX	300V DC, 300K Ohm Ranges
	XXX110XX	3M Ohm Range
	XXX111XX	30M Ohm Range
	001XXXXX	DC Volts Function
	010XXXXX	AC Volts Function
	011XXXXX	2-Wire Ohms Function
	100XXXXX	4-Wire Ohms Function
	101XXXXX	DC Current Function
	110XXXXX	AC Current Function
	111XXXXX	Extended Ohms Function
2	Bit# = 1	Instrument Status Bits
	0	Internal Trigger Enabled
	1	Autorange Enabled
	2	Autozero Enabled
	3	3478A set for 50Hz Operation
	4	Front/Rear Switch in Front Position
	5	Calibration RAM Enabled
	6	External Trigger Enabled
	7	Always Zero (not true)
3	Bit# = 1	SRQ Mask
	0	Data Ready - SRQ for every available reading to the HP-IB
	1	Not used
	2	Syntax Error - SRQ if Syntax Error occurs
	3	Internal Error - SRQ if Hardware Error occurs
	4	Front Panel SRQ - SRQ if SRQ button is pressed
	5	Calibration Error - SRQ if CAL procedure failed
	6	Always Zero (not true)
	7	Power-On SRQ - PON SRQ switch on last time power was turned on or DCL message was received
4	Bit# = 1	Internal Error Information
	0	Set if any of the Calibration RAM locations have incorrect checksums or if a range with an incorrect checksum is selected
	1	The Main CPU RAM Self-Test has failed
	2	The Control ROM Self-Test has failed
	3	An A/D Slope Error was detected
	4	The A/D has failed its Internal Self-Test
	5	A failure in the A/D link (between U403 and U462)
	6	Always Zero
	7	Always Zero
5	Bits	A/D DAC Value
	0-7	A decimal value between 0 to 63 represents the setting of the internal Digital to Analog Converter (DAC). (Refer to this manual's Section VII for information.)

SECTION IV
PERFORMANCE TEST AND CALIBRATION

4-1. INTRODUCTION

4-2. This section of the manual contains Performance Tests and Calibration Procedures. The Performance Tests and Calibration Procedures use the specifications listed in Table 1-1 and summarized in Table 4-1. All Performance Tests and Calibration Procedures can be accomplished without removing the 3478A cover.

Table 4-1. Abbreviated Specifications Table

DC Volts Function (accuracy = ±(% of reading + number of counts))

Range	24 Hour	90 Day	1 Year
30mV	0.025 + 40	0.0275 + 40	0.035 + 40
300mV	0.004 + 4	0.005 + 5	0.007 + 5
3V	0.003 + 2	0.004 + 2	0.006 + 2
30V	0.004 + 3	0.005 + 4	0.007 + 4
300V	0.004 + 2	0.005 + 2	0.007 + 2

DC Current Function (accuracy = ±(% of reading + number of counts))

Range	90 Day	1 Year
300mA	0.11 + 40	0.15 + 40
3A<1A	0.14 + 6	0.17 + 6
3A>1A	1.0 + 30	1.0 + 30

Ohms Function (accuracy = ±(% of reading + number of counts))

Range	24 Hour	90 Day	1 Year
30 ohm	0.023 + 35	0.027 + 41	0.034 + 41
300 ohm	0.0045 + 4	0.012 + 5	0.017 + 5
3K ohm	0.0035 + 2	0.011 + 2	0.016 + 2
30K ohm	0.0035 + 2	0.011 + 2	0.016 + 2
300K ohm	0.0035 + 2	0.011 + 2	0.016 + 2
3M ohm	0.0052 + 2	0.011 + 2	0.016 + 2
30M ohm	0.036 + 2	0.066 + 2	0.078 + 2

AC Volts Function 1 Year Limits (accuracy = ±(% of reading + number of counts))

Frequency	300mV Range	3V,30V Range	300V Range
20Hz-50Hz	1.14 + 163	1.14 + 102	1.18 + 102
50Hz-100Hz	0.46 + 163	0.46 + 103	0.50 + 102
100Hz-20KHz	0.20 + 120	0.20 + 70	0.24 + 70
20KHz-50KHz	0.38 + 205	0.26 + 140	0.42 + 140
50KHz-100KHz	1.20 + 840	0.87 + 780	0.98 + 780
100KHz-300KHz		10.1 + 3720 (30V Range Only)	

AC Current Function 1 Year Limits (accuracy = ±(% of reading + number of counts))

Frequency	300mA Range	3A Range
20Hz-50Hz	1.54 + 163	2.24 + 163
50Hz-1KHz	0.81 + 163	1.50 + 163
1KHz-10KHz	0.72 + 163	1.42 + 163
10KHz-20KHz	0.86 + 163	1.56 + 163

4-3. TEST EQUIPMENT

4-4. *Table 4-2 lists* the recommended test equipment for the Performance Tests, Calibration Procedures, and Troubleshooting. The recommended equipment is listed along with the critical specifications so that substitute equipment may be used. The HP Model 3456A Voltmeter is only recommended if the Standards to be used do not have the required acuracy. In these cases, the Standard and the HP 3456A are connected in parallel and the displayed reading on the 3456A is used as the Standard. A summary of the test equipment required to perform each Performance Test or Calibration Procedure is listed at the beginning of each procedure.

Table 4-2. Recommended Test Equipment

Instrument	Critical Specifications	Recommended Use Model
Digital Voltmeter	Range: 30mV to 300V Accuracy: ±.0020% @ 300V ±.0015% @ IV, 3V, 30V ±.0025% @ 300mV ±. 015% @ 30mV	HP 3456A PCT
DC Volts Standard	Range: 30mV to 300V Accuracy ±.005%	Datron 4000A or 4707 PC
AC Volts Standard	Frequency: 20Hz to 300KHz Range: 30mV to 300V Accuracy: ±1%	Datron 4200 or 4707 PC
Resistance Standard	Range: 10Ω to 10MΩ Accuracy: ±.03%	Datron 4000A or 4707 PC
AC Current Standard	Frequency: 1KHz to 5KHz Range: 100mA to 1A Accuracy: ±.1%	Datron 4200 or 4707 PC
Desktop Computer	HP-IB Capability	HP Model 85B CT HP Model 9000 Series 200/300
Bus System Analyzer	HP-IB Control Capability	HP Model 59401A T
Oscilloscope	Bandwidth: DC to 100MHz	HP Model 1740A T
Signature Analyzer		HP Model 5004A T

P = Performance Test C = Calibration T = Troubleshooting

4-5. TEST CARDS

4-6. Performance Test Cards are provided at the end of this section. The Performance Test Cards are used to record the 3478A's test results. It is recommended that the cards be used as an outline of the Performance Tests and that they be filled out as the test progresses. Each Performance Test Card shows the tests required, the upper test limits, and the lower test limits. There is a separate Performance Test Card for the 24 hour limits, 90 day limits, and 1 year limits. The Performance Test Cards can be used as an abbreviated test procedure once

you become familiar with the detailed test procedure given in the text. The Performance Test Cards can be used as a permanent record of the 3478A. The cards may be reproduced without written permission from Hewlett-Packard.

NOTE

The Performance Test Cards at the end of this section only apply to 3478A's with serial prefix 2545 and above. Refer to Section VI of this manual if you are Performance Testing or Calibrating a 3478A with a serial prefix below 2545.

4-7. PERFORMANCE TEST FAILURES

4-8. If the 3478A fails any of the Performance Tests, first attempt the Calibration Procedure for the range and function that is failing. If the failure cannot be corrected by calibration, refer to Section VII of this manual for troubleshooting procedures.

4-9. TEST CONSIDERATIONS

4-10. Front and Rear Terminals

4-11. In the Performance Tests and Calibration Procedures the 3478A set-up is specified for the front panel input terminals. For all tests and procedures except the AC and DC Current Tests and Procedures, the rear panel terminals may be used. The signals for the AC and DC Current Tests and Procedures may only be applied to the front panel terminals. For either set of terminals make sure the FRONT/REAR Switch is in the correct position before applying the signals.

4-12. Specifications

4-13. The 3478A's specifications are grouped according to instrument function in Table 1-1 and Table 4-1 (DC Volts, AC Volts, etc.). Within each functional group are one, two, or three sets of specifications: 24 hour limits, 90 day limits, and 1 year limits. When Performance Tests or Calibration Procedures are used, be sure to select the appropriate set of specifications. The Performance Test Cards, located at the end of this section, are also divided into 24 hour limits, 90 day limits, and 1 year limits where appropriate.

4-14. Each set of specifications includes an accuracy specification for each voltage, ohms, and current range. The accuracy specification is listed as a percentage of the reading and an add-on number of counts. For example, the 5 digit display mode 24 hour full scale DC volts accuracy on the 30V range (see Tables 1-1 and 4-1) is:

$$\pm(.004\% \text{ of reading} + 3 \text{ counts})$$

giving a full scale accuracy of ±.004% plus 3 counts (or .001%) for a total of ±.005%. This is only true at full scale. The next paragraph describes the case at 1/10 scale measurement accuracy. If the same specification is used in the 4 digit display mode, the total accuracy becomes ±.007% (the percentage remains .004%, but the number of counts changes to 1 in the 4 digit mode or .003%).

4-15. The number of counts adder also affects the accuracy specification at less than full scale. For example, using the same specifications in paragraph 4-14, but only measuring at 1/10 of full scale gives a different total accuracy specification. The percentage remains .004% but the 3 count adder is .033% at 1/10 scale. The total accuracy at 1/10 scale becomes ±.037%, not the ±.005% at full scale.

4-16. Reference Temperature (Temperature Coefficient)

4-17. The ambient air temperature in which the 3478A was last calibrated is called its Reference Temperature. Provided the 3478A is operated within ±5°C (±9°F) of the Reference Temperature, no correction to the accuracy specification is required. If the 3478A is operated outside this range, an adjustment to the rated specifications must be made. The adjustment is listed in Table 1-1 as a percentage of reading and a number of counts adder. The application of the adjustment is identical with the accuracy adjustment application given in paragraphs 4-14 and 4-15. It is recommended that the 3478A be calibrated at an ambient air temperature similar to the expected testing and operating air temperature.

4-18. Accuracy of Standards

4-19. Because the 3478A is able to make highly accurate DC measurements, special care must be taken when calibrating or testing to ensure that the Standards used don't introduce errors. Ideally, the accuracy of the Standards used to test and calibrate the 3478A should be an order of magnitude better than the 3478A. It is important to be aware of the ambiguities caused by the Standards used. The next paragraph gives an example of the ambiguities introduced by the measurement standard.

4-20. As an example of the ambiguities caused by the Standard used to measure the performance of the 3478A, consider the following case. The 3478A's 30V full scale DC accuracy is to be tested with a certain Standard to its 90 day specification. The 3478A accuracy specification is ±.0063% and the Standard used has an ideal accuracy of ±.0006%. If the 3478A indicates a full scale voltage of 30.0021 (.007% high), the reading is within the ambiguous region. If the Standard's output is .0006% high (30.0018 Vdc), the 3478A's actual reading is 30.0003 Vdc which is within the 90 day specification limit. If the Standard's output is right on 30.0000 Vdc, the 3478A reading is too high and out of tolerance. In both cases the Standard is within specification, but may show the 3478A to be in or out of tolerance. This vagueness in the

test specifications is call the ambiguous region and is graphically shown in Figure 4-1. The ambiguous region grows larger when either the 3478A tolerance limits are set tighter (as with the 24 hours specification) or when the accuracy of the Standard decreases. It is important to know the specifications of the Standard and their effect on the ambiguous region of the 3478A specifications when testing or calibrating.

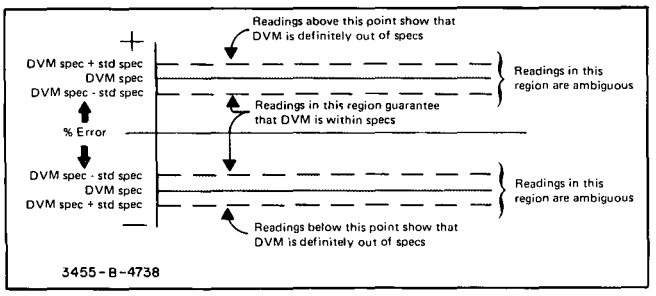

Figure 4-1. Ambiguous Regions

4-21. PERFORMANCE TESTS

4-22. The Performance Tests are separated into five main tests by function: DC Volts, DC Current, AC Volts, AC Current, and Ohms. For a complete Performance Test, the five main tests should be done in the order they are given in this section. The 3478A to be tested should be turned on and allowed to warm-up for at least one hour before testing. The Performance Tests are:

a. DC Volts Test - paragraph 4-23
b. DC Current Test - paragraph 4-28
c. AC Volts Test - paragraph 4-33
d. AC Current Test - paragraph 4-38
e. Ohms Test - paragraph 4-43

NOTE

Leakage paths on the 3478A's front panel area surrounding the input terminals can affect the input impedance. The paths can be removed by gently washing the area using a cotton swab dipped in isopropyl alcohol.

4-23. DC Volts Test

4-24. The DC Volts test limits are printed on the appropriate DC Volts Test Card at the back of this section and in Table 4-3. The Test Card also summarizes the instrument set-up for the test. Each step on the test card corresponds to a step in the test procedure. In the following test procedure the Test Card step numbers are shown in parenthesis (e.g., Step #1).

4-25. Unless otherwise specified, all test signals are applied to the 3478A's HI and LO INPUT terminals.

4-26. Equipment Required. The following test equipment is required for the DC Volts Performance Test. The equipment is summarized with the critical specifications in Table 4-2.

DC Volts Standard - Datron Model 4000A or 4707

4-27. Test Procedure. Ensure that the 3478A to be tested has been turned on and allowed to warm-up for at least one hour. Then do the following:

a. (Step #1) Reset the 3478A by pressing the blue shift button and then the SGL/TRIG (TEST/RESET) button. All segments of the display will be turned on as long the button is held. Check for missing display segments. When

Table 4-3. DC Volts Test Limits

3478A Input	3478A Range	3478A Set Up	24 Hour Limits High	24 Hour Limits Low	90 Day Limits High	90 Day Limits Low	1 Year Limits High	1 Year Limits Low
Short	30 mV	DCV	+00.0040 mV	−00.0040 mV	+00.0040 mV	−00.0040 mV	+00.0040 mV	−00.0040 mV
Short	300 mV		+000.004 mV	−000.004 mV	+000.005 mV	−000.005 mV	+000.005 mV	−000.005 mV
Short	3V		+0.00002 V	−0.00002 V	+0.00002 V	−0.00002 V	+0.00002 V	−0.00002 V
Short	30 V		+00.0003 V	−00.0003 V	+00.0004 V	−00.0004 V	+00.0004 V	−00.0004 V
Short	300 V		+000.002 V	−000.002 V	+000.002 V	−000.002 V	+000.002 V	−000.002 V
+ 30 mV	30 mV		+30.0115 mV	+29.9885 mV	+30.0123 mV	+29.9877 mV	+30.0145 mV	+29.9855 mV
+300 mV	300 mV		+300.016 mV	+299.984 mV	+300.020 mV	+299.980 mV	+300.026 mV	+299.974 mV
+300 mV	3 V		+0.30003 V	+0.29997 V	+0.30003 V	+0.29997 V	+0.30004 V	+0.29996 V
+1 V	3 V		+1.00005 V	+0.99995 V	+1.00006 V	+0.99994 V	+1.00008 V	+0.99992 V
−1 V	3 V		−0.99995 V	−1.00005 V	−0.99994 V	−1.00006 V	−0.99992 V	−1.00008 V
−3 V	3 V		−2.99989 V	−3.00011 V	−2.99986 V	−3.00014 V	−2.99980 V	−3.00020 V
+3 V	3 V		+3.00011 V	+2.99989 V	+3.00014 V	+2.99986 V	+3.00020 V	+2.99980 V
+3 V	3 V	AZ Off	+3.00014 V	+2.99984 V	+3.00017 V	+2.99983 V	+3.00023 V	+2.99977 V
+3 V	3 V	AZ On, 4 Digit	+3.0002 V	+2.9998 V	+3.0002 V	+2.9998 V	+3.0003 V	+2.9997 V
		3 Digit	+3.001 V	+2.999 V	+3.001 V	+2.999 V	+3.001 V	+2.999 V
+ 3 V	30 V	5 Digit	+03.0004 V	+02.9996 V	+03.0006 V	+02.9994 V	+03.0006 V	+02.9994 V
+ 10 V	30 V		+10.0007 V	+09.9993 V	+10.0009 V	+09.9991 V	+10.0011 V	+09.9989 V
+ 30 V	30 V		+30.0015 V	+29.9985 V	+30.0019 V	+29.9981 V	+30.0025 V	+29.9975 V
+ 30 V	30 V	AZ Off	+30.0026 V	+29.9974 V	+30.0030 V	+29.9970 V	+30.0036 V	+29.9964 V
+300 V	300 V	AZ On	+300.014 V	+299.986 V	+300.017 V	+299.983 V	+300.023 V	+299.977 V

the button is released, the 3478A will perform it's internal self-test. The display must show the words SELF TEST OK for a few seconds. Do not attempt to perform the DC Volts Performance Test if this display message is not obtained. If the self-test should fail, refer to Section VII of this manual for troubleshooting procedures.

NOTE

Following the reset/self-test, the 3478A is placed in the DC Volts function, Autorange On, Internal Trigger, and 5 digit display mode.

b. (Step #2) Short the 3478A's HI and LO INPUT terminals. The instrument should autorange to the 30mV range.

c. Record the displayed reading on the Test Card. Ensure the reading is within the limits shown on the Test Card and in Table 4-3.

d. (Step #3, 4, 5, and 6) Set the 3478A to the 300mV, 3V, 30V, and 300V Ranges by pressing the uprange button once for each range. Record the 3478A reading at each range and ensure that the readings are within the limits marked on the Test Card and in Table 4-3. If any of the readings are out of tolerance, attempt the DC Volts Calibration Procedure given in paragraph 4-57.

e. (Step #7 and 8) Remove the short from the 3478A INPUT terminals and set the multimeter to the 30mV range by pressing the downrange button.

f. Set the DC Volts Standard for zero volts output. The 3478A should be set in the 5 digit display mode of the DC Volts function on the 30mV range.

g. Connect the DC Volts Standard output to the 3478A input terminals as shown in Figure 4-2.

h. Check the 3478A 30mV range full scale accuracy by setting the DC Volts Standard to output 30 mV. Record the reading on the Test Card. Ensure the reading is within the limits on the Test Card and in Table 4-3.

i. Uprange the 3478A to the 300mV range. Set the DC Volts Standard to output 300mV and check the 3478A full scale accuracy. Record the reading on the Test Card. Ensure the reading is within the limits on the Test Card and in Table 4-3.

j. (Step #9) Uprange the 3478A to the 3V range. Set the DC Volts Standard for an output of 300mV (the same output as in step i). Record the reading on the Test Card. Ensure the reading is within the limits on the Test Card and in Table 4-3.

k. (Step #10) Leave the 3478A as set and change the DC Volts Standard output to +1V. Record the reading on the Test Card. Ensure the reading is within the limits on the Test Card and in Table 4-3.

l. (Step #11) Set the DC Volts Standard to output −1V (change the output polarity or reverse the leads to the 3478A). Record the reading on the Test Card. Ensure the reading is within the limits on the Test Card and in Table 4-3.

m. (Step #12) Using the same set-up in step l (negative input voltage to the 3478A), set the DC Volts Standard to output -3V. Record the reading on the Test Card. Ensure the reading is within the limits on the Test Card and in Table 4-3.

n. (Step #13) Set the DC Volts Standard for an output of +3V (change the DC Volts Standard output polarity or reverse the leads as in step l). Record the reading on the Test Card. Ensure that reading is within the limits on the Test Card and in Table 4-3.

o. (Step #14) With the +3V applied to the 3478A, turn Autozero off by pressing the blue shift button and then

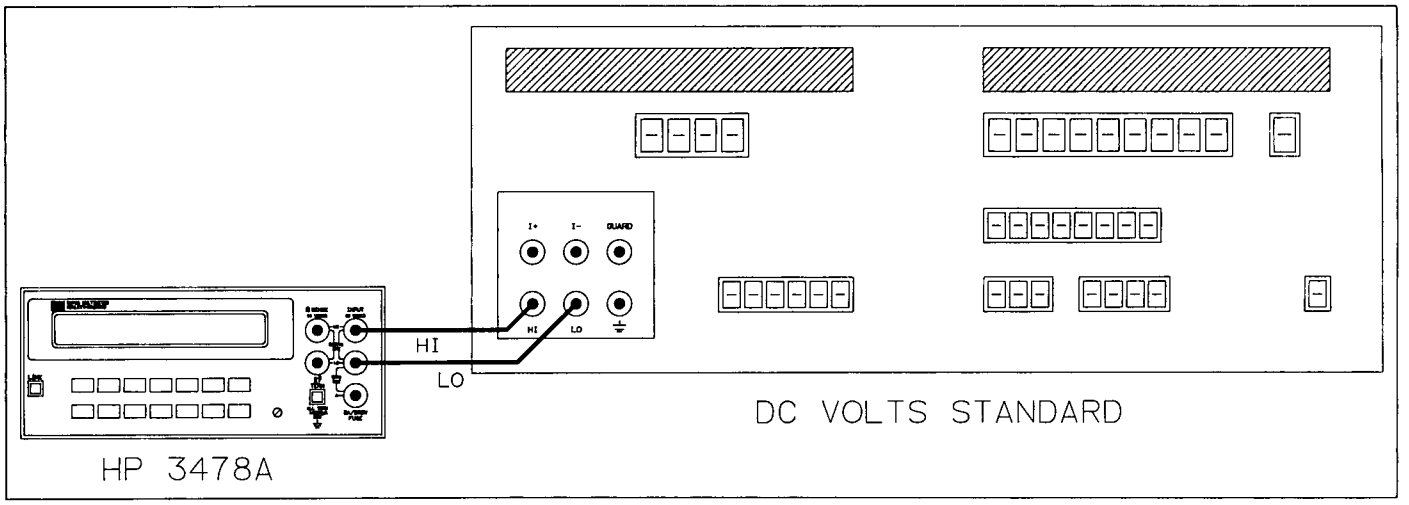

Figure 4-2. DC Voltage Test and Calibration Connections

the INT/TRIG (AUTO ZERO) button. Record the reading on the Test Card. Ensure the reading is within the limits on the Test Card and in Table 4-3.

p. (Step #15) Turn Autozero on by pressing the blue shift button and then the INT/TRIG (AUTO ZERO) button.

q. (Step # 16) With the +3V applied to the 3478A, set the 3478A to the 4 digit display mode by pressing the blue shift button and then the uprange (4) button. Record the reading on the Test Card. Ensure the reading is within the limits on the Test Card and in Table 4-3.

r. (Step #17) With the +3V applied to the 3478A, set the 3478A to the 3 digit display mode by pressing the blue shift button and then the AUTO/MAN (3) button. Record the reading on the Test Card. Ensure the reading is within the limits on the Test Card and in Table 4-3.

s. (Step #18) Return the 3478A to the 5 digit display mode by pressing the blue shift button and then the uprange (5) button.

t. (Step #19, 20 and 21) Set the 3478A to the 30V range by pressing the uprange button. Check the 3478A accuracy at 1/10, 1/3, and full scale by setting the DC Volts Standard to output +3V, +10V, and +30V respectively. At each setting record the 3478A reading on the Test Card. Ensure the readings are within the limits on the Test Card and in Table 4-3.

u. (Step #22) With the +30V still applied to the 3478A, turn Autozero off by pressing the blue shift button and then the INT/TRIG (AUTO ZERO) button. Record the reading on the Test Card. Ensure the reading is within the limits on the Test Card and in Table 4-3.

v. (Step #23) Turn Autozero on by pressing the blue shift button and then the INT/TRIG (AUTO ZERO) button.

WARNING

Potentially lethal voltages are used in the next 3 tests. Do not touch the DC Volts Standard's output terminals or the 3478A's input terminals. Ensure that the DC Volts Standard's output is turned off before moving any connections.

w. (Step #24) Set the 3478A to the 300V range by pressing the uprange button. Set the DC Volts Standard to output +300V. Record the reading on the Test Card. Ensure the reading is within the limits on the Test Card and in Table 4-3.

x. (Step #25) Turn off the DC Volts Standard output. Disconnect the DC Volts Standard test leads from the 3478A INPUT terminals.

y. (Step #26) Perform the DC Common Mode Rejection test (DC CMR test). To perform the test:

1. Set the 3478A to the 30mV range.
2. Connect a 1K ohm resistor between the 3478A's HI and LO INPUT terminals.
3. Note the reading on the 3478A. This reading will be used in step 5.
4. Ensure the DC Volts Standard's output is turned off. Connect the Standard so that the HI output lead is connected to the 3478A HI INPUT terminal. Connect the Standard LO output lead to the 3478A chassis (use the BNC shield on the rear panel). The connection is shown in Figure 4-3.
5. Set the DC Volts Standard for an output of +450V. Record the reading on the 3478A. Ensure that this reading is within 450mV of the reading obtained in step 3.

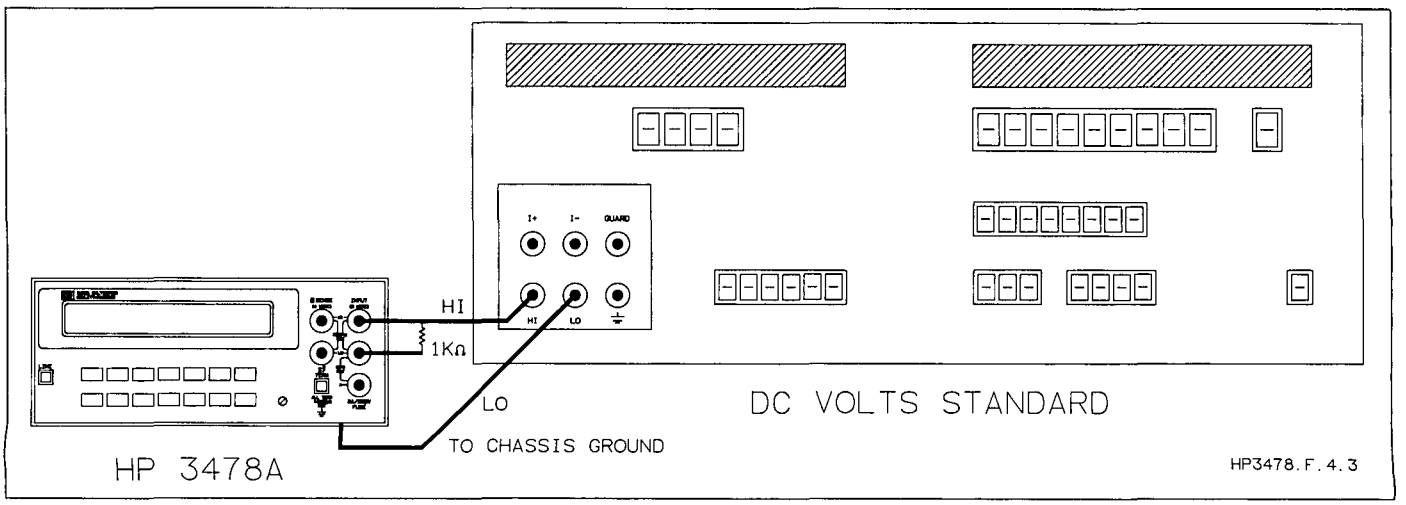

Figure 4-3. DC Common Mode Rejection Test

z. Turn the DC Volts Standard's output off. Disconnect the leads from the 3478A. This completes the DC Volts Performance Test. If any test result was outside the limits on the Test Card or in Table 4-3, try calibrating the DC Volts function of the 3478A. Calibration procedures for the DC Volts function begin in paragraph 4-57. If recalibration will not cure the problem, see Section VII of this manual for troubleshooting procedures.

4-28. DC Current Test

4-29. The DC Current Test limits are listed on the DC Current Test Card (located at the end of this section) and in Table 4-4. The Test Card also summarizes the instrument set-up for each test. Each step on the Test Card corresponds to a step in the test procedure. In the following procedure the Test Card step numbers are shown in parenthesis (e.g., Step #1).

4-30. Unless otherwise specified, all signals are applied to the 3478A front panel LO and A INPUT terminals.

4-31. Equipment Required. The following test equipment is required for the DC Current Performance Test. The equipment is summarized with the critical specifications in Table 4-2.

DC Current Standard - Datron Model 4000A or 4707

4-32. Test Procedure. Ensure the 3478A will pass the DC Volts Performance Test (paragraph 4-23) before attempting the DC Current Performance Test. The 3478A should have been turned on and allowed to warm-up for at least one hour before testing. Then do the following:

a. (Step #1) Reset the 3478A by pressing the blue shift button and then the SGL/TRIG (TEST/RESET) button.

b. (Step #2) Set the 3478A to the DC Current function. Install a short between the LO and A INPUT terminals on the front panel. The 3478A should autorange to the 300mA range.

c. Record the reading on the Test Card. Ensure the reading is within the limits on the Test Card and in Table 4-4.

d. (Step #3) Set the 3478A to the 3A range by pressing the uprange button. Record the reading on the Test Card. Ensure the reading is within the limits on the Test Card and in Table 4-4.

e. (Step #4) Remove the short from the LO and A INPUT terminals. Set the 3478A to the 300mA range by pressing the downrange button.

f. Connect the DC Current Standard output to the 3478A LO and A INPUT terminals as shown in Figure 4-4. Set the DC Current Standard for an output of +100mA.

g. Record the reading on the Test Card. Ensure the reading is within the limits on the Test Card and in Table 4-4.

h. (Step #5) Set the 3478A to the 3A range by pressing the uprange button. Set the DC Current Standard for an output of +1A.

i. Record the reading on the Test Card. Ensure the reading is within the limits on the Test Card and in Table 4-4.

j. Turn the DC Current Standard's output off. Disconnect the test leads. This completes the DC Current Performance Test. If any test result was outside the limits on the Test Card or in Table 4-4, try calibrating the DC Current function of the 3478A. Calibration procedures for the DC Current function begin at paragraph 4-61. If recalibration will not cure the problem, see Section VII of this manual for troubleshooting information.

4-33. AC Volts Test

4-34. The AC Volts test limits are printed on the appropriate Test Card at the back of this section and in Table 4-5. The Test Card also summarizes the instrument set-up for the test. Each step on the Test Card corresponds to a step in the test procedure. In the following test procedure the Test Card step numbers are shown in parenthesis (e.g., Step #1).

4-35. Unless otherwise specified, all test signals are applied to the 3478A HI and LO INPUT terminals.

4-36. Equipment Required. The following test equipment is required for the AC Volts Performance Test. The equipment is summarized with the critical specifications in Table 4-2.

AC Volts Standard — Datron Model 4200 or 4707

4-37. Test Procedure. Ensure that the 3478A passes the DC Volts Performance Test before attempting the AC Volts

Table 4-4. DC Current Test Limits

3478A	3478A	3478A	90 Day Limits		1 Year Limits	
Input	Range	Set Up	high	low	high	low
Short	300mA	DCI	+000.040mA	−000.040mA	+000.040mA	−000.040mA
Short	3A		+0.00006A	−0.00006A	+0.00006A	−0.00006A
+100mA	300mA		+100.150mA	+099.850mA	+100.190mA	+099.810mA
+1A	3A		+1.00146A	+0.99854A	+1.00176A	+0.99824A

Table 4-5. AC Volts Test Limits

3478A Input	3478A Range	3478A Set Up	1 Year Limits High	1 Year Limits Low
.028 V,20 KHz	300 mV	ACV	028.176 mV	027.824 mV
0.28 V,20 KHz	300 mV		280.680 mV	279.320 mV
0.28 V,20 KHz	3 V		0.28126 V	0.27874 V
1.5 V,20 KHz	3 V		1.50370 V	1.49630 V
2.8 V,20 KHz	3 V		2.80630 V	2.79370 V
2.8 V,20 KHz	30 V		02.8126 V	02.7874 V
28 V,20 KHz	30 V		28.0630 V	27.9370 V
28 V,20 KHz	300 V		028.137 V	027.863 V
280 V,20 KHz	300 V		280.742 V	279.258 V
0.28 V,50 KHz	300 mV		281.269 V	278.731 V
2.8 V,50 KHz	3 V		2.80868 V	2.79132 V
28 V,50 KHz	30 V		28.0868 V	27.9132 V
280 V,50 KHz	300 V		281.316 V	278.684 V
0.28 V,100 KHz	300 mV		284.200 mV	275.800 mV
0.28 V,100 KHz	3 V		0.29024 V	0.26976 V
2.8 V,100 KHz	3 V		2.83216 V	2.76784 V
15 V,100 KHz	30 V		15.2085 V	14.7915 V
28 V,100 KHz	30 V		28.3216 V	27.6784 V
280 V,100 KHz	300 V		283.524 V	276.476 V
25 V,300 KHz	30 V		28.8970 V	22.1030 V
2.8 V,50 Hz	3 V		2.81391 V	2.78609 V
2.8 V,20 Hz	3 V		2.83294 V	2.76706 V

Performance Test. The 3478A should be turned on and allowed to warm-up for at least one hour. The do the following:

a. (Step #1) Reset the 3478A by pressing the blue shift button and then the SGL/TRIG (TEST/RESET) button.

b. (Step #2) Set the 3478A to the AC Volts function and the 300mV range.

c. Connect the AC Volts Standard output to the 3478A HI and LO INPUT terminals as shown in Figure 4-5. Set the AC Volts Standard for an output of 0.028V at 20KHz.

d. (Step #3 and 4) Record the reading. Ensure the reading is within the limits shown on the Test Card and in Table 4-5. Check the full scale accuracy by setting the AC Volts Standard for an output of 0.28V at 20KHz. Record the reading. Ensure the reading is within the limits shown on the Test Card and in Table 4-5.

e. (Step #5, 6, and 7) Set the 3478A to the 3V range by pressing the uprange button. Check the 1/10, ½ and full scale accuracy of the 3V range by applying 0.28V, 1.5V, and 2.8V at 20 KHz respectively. At each setting record the reading and ensure the reading is within the limits shown on the Test Card and in Table 4-5.

f. (Step #8, and 9) Set the 3478A to the 30V range by pressing the uprange button. Check the 1/10 and full scale accuracy by applying 2.8V and 28V at 20KHz respectively. Record the readings and ensure the readings are within the limits shown on the Test Card and in Table 4-5.

WARNING

Potentially lethal voltages are used in the next 3 steps. Do not touch the AC Volts Standard's output terminals or the 3478A input terminals. Ensure the AC Volts Standard's output is turned off before installing or removing the test leads.

g. (Step #10 and 11) Set the 3478A to the 300V range by pressing the uprange button. Check the 1/10 and full scale accuracy by applying 28V and 280V at 20KHz respectively. Record the readings and ensure the readings are within the limits shown on the Test Card and in Table 4-5.

h. (Step #12, 13, 14, and 15) Set the AC Volts Standard output frequency to 50KHz. Check the 300V, 30V, 3V, and 300mV ranges full scale accuracy by applying 280V, 28V, 2.8V, and 0.28V respectively. Always ensure

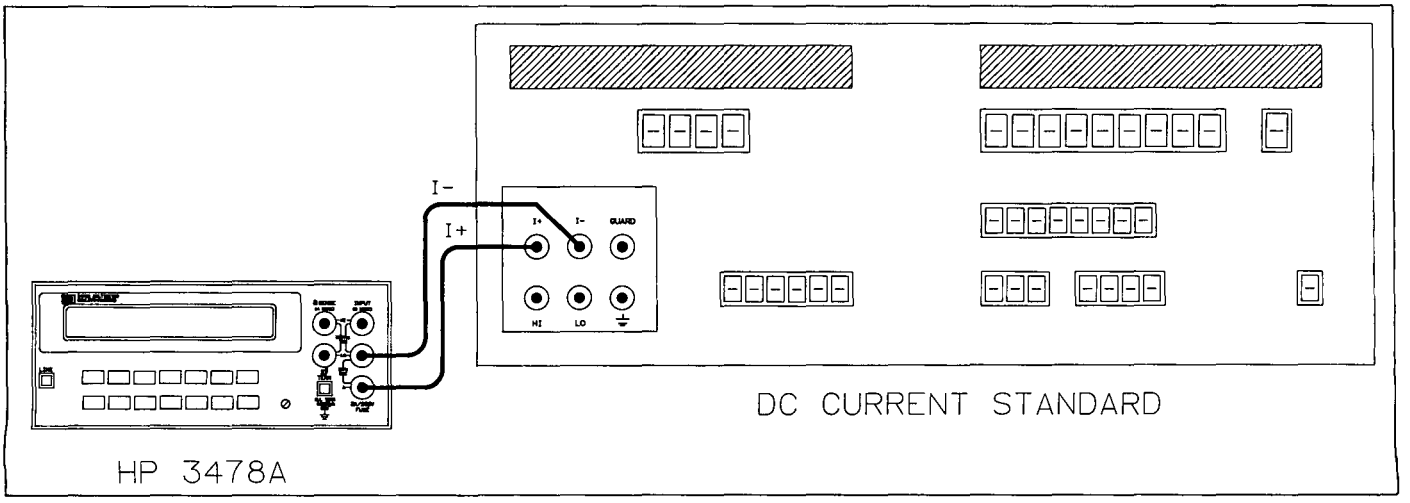

Figure 4-4. DC Current Test and Calibration Connections

the AC Volts Standard's output is turned off or downranged before the 3478A is downranged. Record the readings at each voltage and range. Ensure the readings are within the limits shown on the Test Card and in Table 4-5.

i. (Step #16) Set the AC Volts Standard for an output of 0.28V at 100KHz. Set the 3478A to the 300mV range. Check the full scale accuracy. Record the reading. Ensure the reading is within the limits shown on the Test Card and in Table 4-5.

j. (Step #17 and 18) Set the 3478A to the 3V range by pressing the uprange button. Record the 1/10 scale reading. Set the AC Volts Standard output for 2.8V at 100KHz. Record the full scale reading. Ensure both readings are within the limits shown on the Test Card and in Table 4-5.

k. (Step #19 and 20) Set the 3478A to the 30V range by pressing the uprange button. Set the AC Volts Standard output for 15V at 100KHz. Record the ½ scale reading. Set the AC Volts Standard output for 28V at 100KHz. Record the full scale reading. Ensure both readings are within the limits shown on the Test Card and in Table 4-5.

WARNING

The next test uses potentially lethal voltage. Do not touch the AC Volts Standard's output terminals or the 3478A input terminals. Ensure AC Volts Standard's output is off before installing or removing test leads.

l. (Step #21) Set the 3478A to the 300V range by pressing the uprange button. Set the AC Volts Standard for an output of 280V at 100KHz. Record the reading. Ensure the reading is within the limits shown on the Test Card and in Table 4-5. Turn off the AC Volts Standard's output.

m. (Step #22) Set the 3478A to the 30V range by pressing the downrange button. Set the AC Volts Standard for an output of 28V at 300KHz. Record the reading. Ensure the reading is within the limits on the Test Card and in Table 4-5.

n. (Step #23 and 24) Set the AC Volts Standard's output for 2.8V at 50Hz. Set the 3478A to the 3V range by pressing the downrange button. Record the reading. Set the AC Volts Standard's output for 2.8V at 20Hz. Record the reading. Ensure both readings are within the limits on the Test Card and in Table 4-5.

o. Turn off the AC Volts Standard. Remove the test connections. This completes the AC Volts Performance Test. If any test results was outside the limits shown on the Test Card or in Table 4-5, try recalibrating the 3478A. Calibration procedures for the AC Volts function begin at paragraph 4-66. If recalibration will not cure the problem, see Section VII of this manual for troubleshooting procedures.

4-38. AC Current Test

4-39. The AC Current test limits are printed on the appropriate Test Card at the back of this section and in Table 4-6. The Test Card also summarizes the instrument set-up for the test. Each step on the Test Card corresponds to a step in the procedure. In the following procedure the Test Card step numbers are shown in parenthesis (e.g., Step #1).

Table 4-6. AC Current Test Limits

3478A Input	3478A Range	3478A Set Up	1 Year Limits high	1 Year Limits low
.03A,5KHz	300mA	ACI	030.379mA	029.621mA
0.1A 5KHz	300mA		100.883mA	099.117mA
1A,5KHz	1A		1.01583A	0.98417A

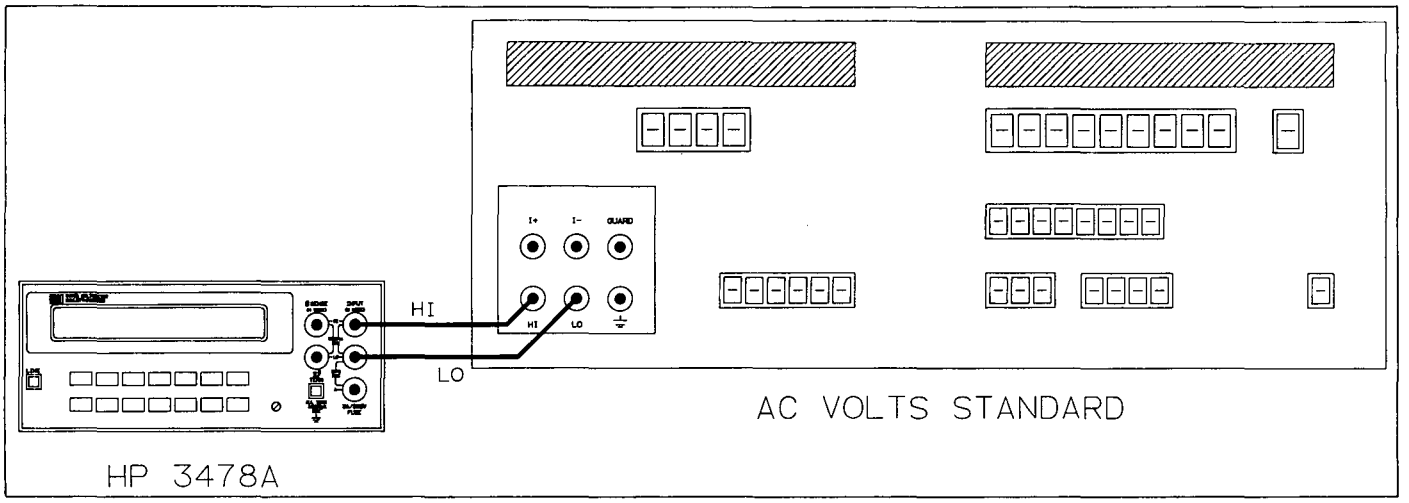

Figure 4-5. AC Voltage Test and Calibration Connections.

4-40. Unless otherwise specified, all signals are applied to the 3478A front panel A and LO INPUT terminals.

4-41. Equipment Required. The following test equipment is required for the AC Current Performance Test. The equipment is summarized with the critical specifications in Table 4-2.

AC Current Standard — Datron Model 4200 or 4707

4-42. Test Procedure. Ensure that the 3478A passes the AC Volts Performance Test before attempting the AC Current Performance Test. The 3478A should be turned on and allowed to warm-up for at least one hour. Then do the following:

a. (Step #1) Reset the 3478A by pressing the blue shift button and then the SGL/TRIG (TEST/RESET) button.

b. (Step #2) Set the 3478A to the AC Current function and the 300mA range.

c. (Step #3) Set the AC Current Standard for an output frequency of 5KHz. This output frequency will be used for all steps in this test. Connect the AC Current Standard to the 3478A front panel A and LO INPUT terminals as shown in Figure 4-6.

d. Set the AC Current Standard for an output of 30mA. Record the reading. Ensure the reading is within the limits shown on the Test Card an in Table 4-6.

e. (Step #4) Set the AC Current Standard for an output of 0.1A. Record the reading. Ensure the reading is within the limits shown on the Test Card and in Table 4-6.

f. (Step #5) Set the 3478A to the 3A range by pressing the uprange button. Set the AC Current Standard for an output of 1A. Record the reading. Ensure the reading is within the limits on the Test Card and in Table 4-6.

g. Turn off the AC Current Standard's output. Disconnect the test leads. This concludes the AC Current Performance Test. If If any test result was outside the limits on the Test Card or in Table 4-6, try recalibrating the instrument. Calibration procedures for the AC Current function begin at paragraph 4-72. If recalibration will not cure the problem, see Section VII of this manual for troubleshooting procedures.

4-43. Ohms Test

4-44. The Ohms Performance Test limits are printed on the Test Card at the back of this section and in Table 4-7. Two sets of limits are shown, full scale and ⅓ scale, to allow for different Standards. The Test Card also summarizes the instrument set-up for each test. Each step on the Test Card corresponds to a step in the test procedure. In the following test procedure the Test Card step numbers are shown in parenthesis (e.g., Step #1).

4-45. There are several important considerations for performing the Ohms Performance Test. These considerations are:

1) The Ohms Performance Test is only valid in the Ohms function last calibrated. For example, if the 3478A was last calibrated in the 4-Wire ohms function, the Ohms Performance Test should also be performed in the 4-Wire ohms function.

2) If possible, the same test leads used to calibrate the 3478A ohms function should be used in the Ohms Performance Test. This is especially important in the 2-Wire ohms function where the impedance of the test leads is compensated during calibration. Different test leads will have different impedances and so create invalid readings.

3) The best results will be obtained when the test leads are as short as possible. Longer test leads are more susceptible to noise and can cause invalid readings.

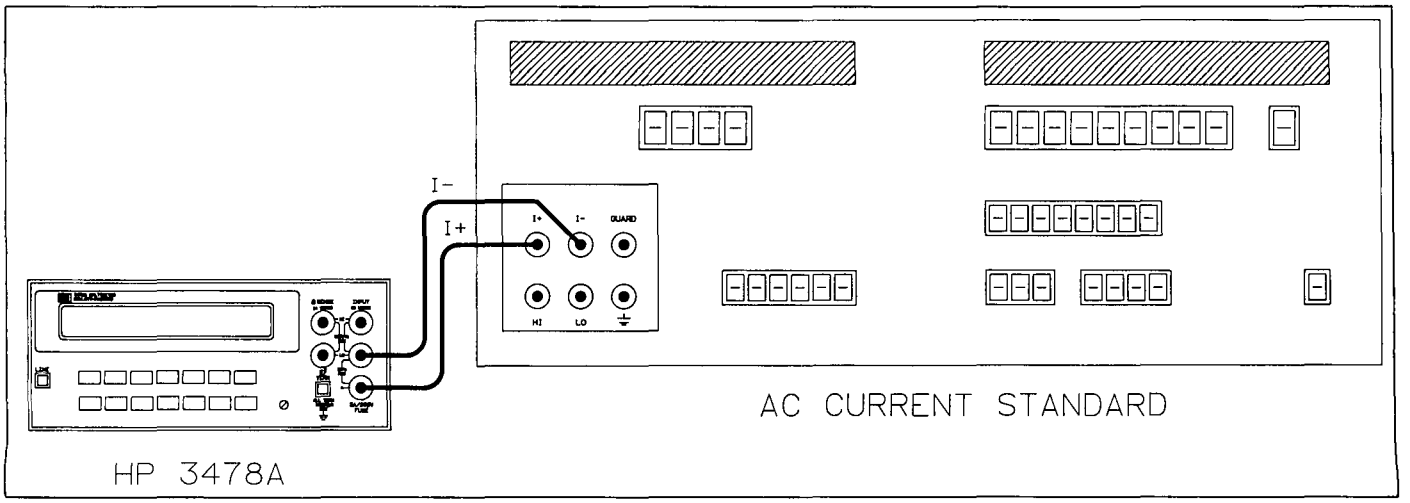

Figure 4-6. AC Current Test and Calibration Connections

Table 4-7. Ohms Test Limits

3478A	3478A	3478A	24 Hour Limits		90 Day Limits		1 Year Limits	
Input	Range	Set Up	high	low	high	low	high	low
Short	30	Ohms	00.0035	-00.0035	00.0041	-00.0041	00.0041	-00.0041
Short	300		000.004	-000.004	000.004	-000.004	000.005	-000.005
Short	3K		0.00002K	-0.00002K	0.00002K	-0.00002K	0.00002K	-0.00002K
Short	30K		00.0002K	-00.0002K	00.0002K	-00.0002K	00.0002K	-00.0002K
Short	300K		000.002K	-000.002K	000.002K	-000.002K	000.002K	-000.002K
Short	3M		0.00002M	-0.00002M	0.00002M	-0.00002M	0.00002M	-0.00002M
Short	30M		00.0002M	-00.0002M	00.0002M	-00.0002M	00.0002M	-00.0002M
30	30		30.0104	29.9896	30.0122	29.9878	30.0143	29.9857
(10)			10.0058	09.9942	10.0068	09.9932	10.0075	09.9925
300	300		300.018	299.982	300.041	299.959	300.056	299.944
(100)			100.009	099.991	100.017	099.983	100.022	099.978
3K	3K		3.00013K	2.99987K	3.00035K	2.99965K	3.00050K	2.99950K
(1K)			1.00006K	0.99994K	1.00013K	0.99987K	1.00018K	0.99982K
30K	30K		30.0013K	29.9987K	30.0035K	29.9965K	30.0050K	29.9950K
(10K)			10.0006K	09.9994K	10.0013K	09.9987K	10.0018K	09.9982K
300K	300K		300.013K	299.987K	300.035K	299.965K	300.050K	299.950K
(100K)			100.006K	099.994K	100.013K	099.987K	100.018K	099.982K
3M	3M		3.00018M	2.99982M	3.00035M	2.99965M	3.00050M	2.99950M
(1M)			1.00007M	0.99993M	1.00013M	0.99987M	1.00018M	0.99982M
30M	30M		30.0110M	29.9890M	30.0200M	29.9800M	30.0236M	29.9764M
(10M)			10.0038M	09.9962M	10.0068M	09.9932M	10.0080M	09.9920M

4) The Ohms Performance Test can be performed at either full scale or ⅓ scale. Because of this, two sets of test limits are shown on the Test Card and in Table 4-7. The ⅓ scale limits are shown in parenthesis in the step number on the Test Card and in the input to the 3478A in Table 4-7.

5) This Ohms Performance Test is written to support the recommended Resistance Standard. Figure 4-7 shows the test connections for 2-Wire ohms. Figure 4-8 shows the test connections for 4-Wire ohms.

6) If the 4-Wire ohms function is to be tested, shorting the INPUT terminals requires that both the sense and input terminals be shorted as shown in Figure 4-9.

4-46. Equipment Required. The following test equipment is required to perform the Ohms Performance Test. The equipment is summarized with the critical specifications in Table 4-2.

Resistance Standard — Datron Model 4000A or 4707

4-47. Test Procedure. Ensure the 3478A passes the DC Volts Performance Test before attempting the Ohms Performance Test. The 3478A should be turned on and allowed to warm-up for at least one hour. Then do the following:

a. (Step #1) Reset the 3478A by pressing the blue shift button and then the SGL/TRIG (TEST/RESET) button.

b. (Step #2) Set the 3478A to the desired ohms function (see paragraph 4-45). Apply a short to the INPUT terminals (in the 4-Wire ohms function you must short both the input terminals and the sense terminals as shown in Figure 4-9). Record the reading. Ensure the reading is within the limits shown on the Test Card and in Table 4-7.

c. (Step #3, 4, 5, 6, 7, and 8) With the input to the 3478A still shorted, set the 3478A to the 300Ω, 3KΩ, 30KΩ, 300KΩ, 3MΩ, and 30MΩ ranges by pressing the uprange button once for each range. At each range, record the reading. Ensure the readings are within the limits shown on the Test Card and in Table 4-7. If any readings are not within the limits, perform the Ohms Calibration procedure beginning at paragraph 4-86.

d. (Step #9) Remove the short from the 3478A INPUT terminals. Set the 3478A to the 30Ω range. Connect the Resistance Standard to the 3478A INPUT terminals (using either the connection shown in Figure 4-7 or 4-8, as appropriate).

e. Set the Resistance Standard for an output of 30Ω (may also be 10Ω as described in paragraph 4-45). Record the reading. Ensure the reading is within the limits shown on the Test Card and in Table 4-7.

NOTE

The test limits shown on the Test Card and in Table 4-7 assume a nominal value for the Resistance Standard. If the actual value of the Resistance Standard used differs from this nominal value, the test limits will need to be adjusted to compensate.

f. (Step #10, 11, 12, 13, 14, and 15) Check the 300Ω, 3KΩ, 30KΩ, 300KOHm, 3MΩ, and 30MΩ ranges of the 3478A by applying the following resistances to the INPUT terminals: 300Ω (or 100Ω), 3KΩ (or 1KΩ), 30KΩ (or 10KΩ), 300KΩ (or 100KOhm), 3MΩ (1MΩ), and 30MΩ (or 10MΩ) respectively. Record the reading at each range. Ensure the readings are within the limits shown on the Test Card and in Table 4-7.

g. Remove the test leads from the 3478A. This concludes the Ohms Performance Test. If any of the test results were outside the test limits, try recalibrating the Ohms function of the 3478A. Calibration procedures begin at paragraph 4-78. If recalibration does not cure the problem, see Section VII of this manual for troubleshooting information.

4-48. CALIBRATION PROCEDURES

4-49. General

4-50. The 3478A is electronically calibrated by storing calibration constants in non-volatile memory. There are no mechanical adjustments. Calibration requires access to the 3478A front panel.

4-51. Internally, during calibration, the 3478A averages ten readings of the signal applied to the input terminals and uses this average to compute a calibration constant. Once indicated by the user, this calibration constant is stored in non-volatile memory and then used to adjust all future measurements in that range and function.

4-52. The general procedure for calibration is to first set the offset by applying a short to the INPUT terminals and then set the gain by applying a full scale signal to the INPUT terminals. This procedure is repeated for each range in each function. (Some functions and ranges only require a ⅓ scale input to set the gain.)

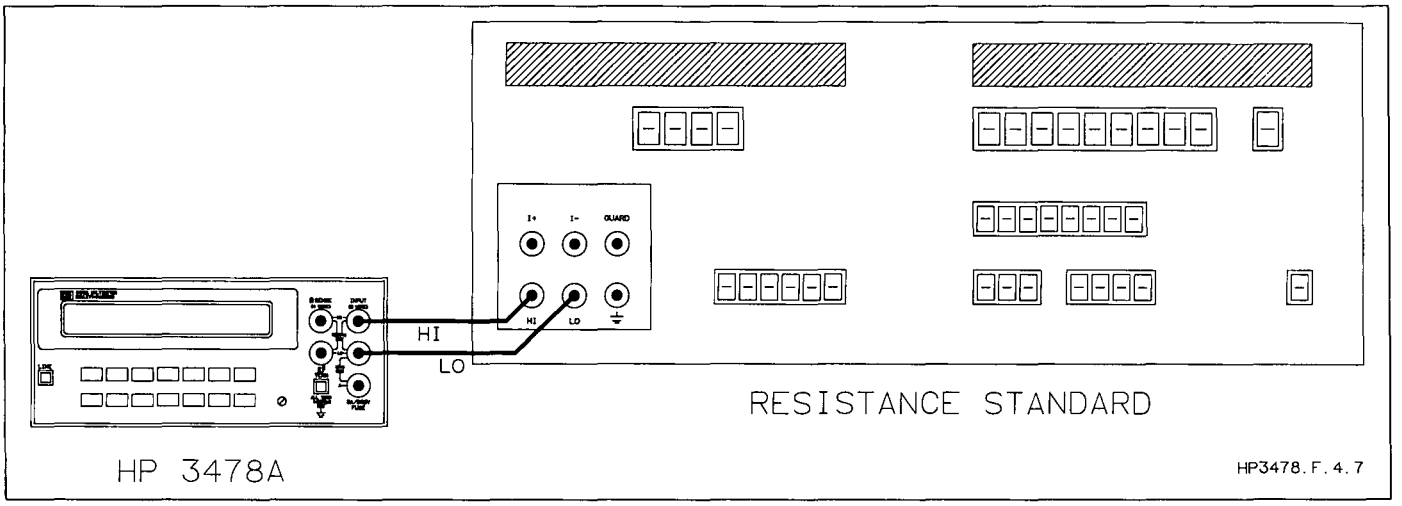

Figure 4-7. 2-Wire Ohms Test and Calibration Connections

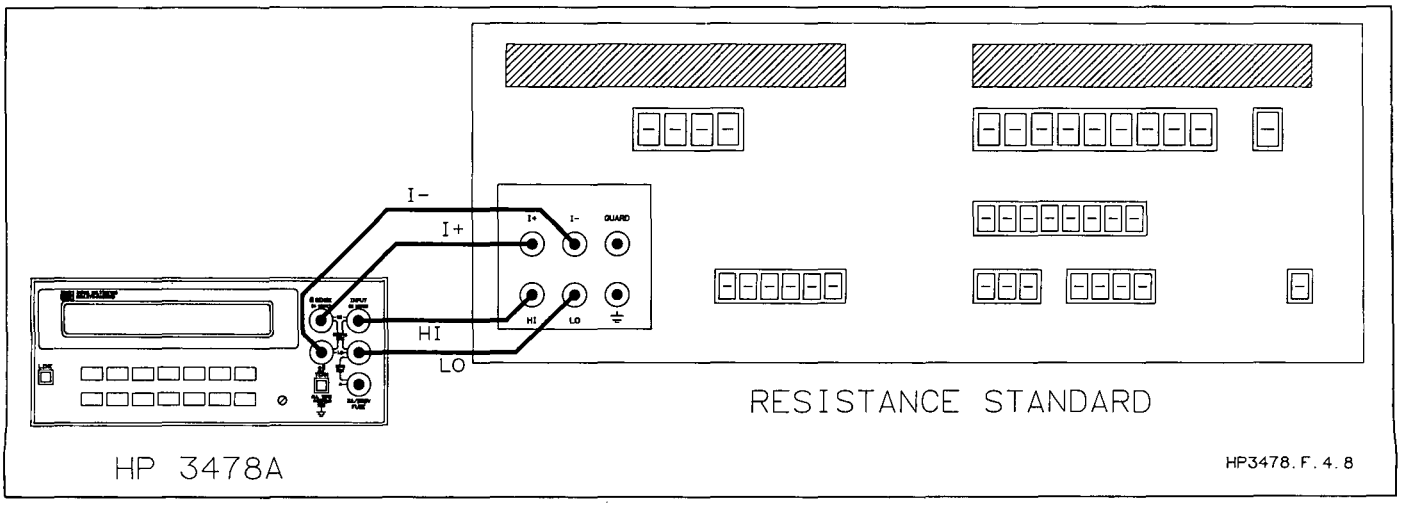

Figure 4-8. 4-Wire Ohms Test and Calibration Connections

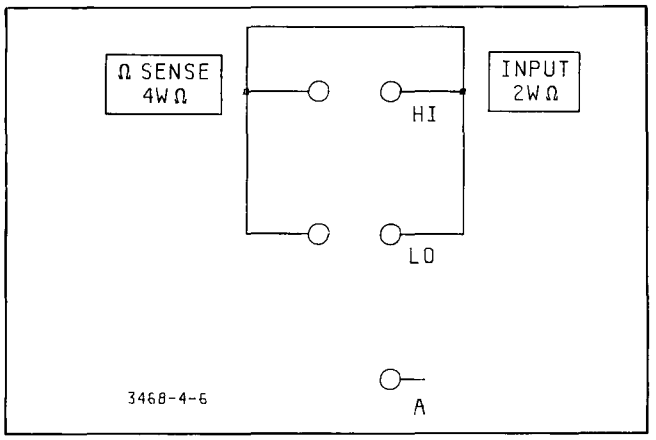

Figure 4-9. 4-Wire Ohms Short

4-53. When calibration is enabled, the 3478A display will first show the currently set value of the offset. This is indicated in the display by a zero (or approximately zero) reading followed by the letter "C". When a new calibration is requested, the "C" is replaced by "?".

4-54. When calibrating the gain (full scale), the reading in the display can be changed to the exact input value by using the uprange and downrange buttons. The reading displayed will increment or decrement as long as the button is pressed. When the exact value is reached the new value is stored by pressing the SGL/TRIG button. Note that this is only necessary and desirable when the exact value of the input signal is known. If the calibration Standard used has a high enough accuracy, this adjustment is not necessary.

4-55. Calibration Messages

4-56. The 3478A display can show a variety of messages when calibrating. The following list contains the messages that may be displayed and describes the meaning of each message.

a. UNCALIBRATED - This message is typically displayed following a self-test when the calibration RAM checksum is incorrect. The accuracy of the 3478A is always in doubt if this message is displayed.

b. ENABLE CAL - This message indicates that a calibration was attempted without the front panel calibration switch set to the correct position. (The slot of the switch must be set vertically to allow calibration.)

c. CAL ABORTED - This message is displayed when an incorrect front panel button is pushed during the calibration procedure. The message can also occur if an input overload is detected or an A/D error occurs.

d. VALUE ERROR - This message will be displayed when any of the following conditions are true.

1. A zero (offset) calibration is attempted and the 3478A is reading a value greater than ± 1000 counts (e.g., 1 Ohm on the 30 Ohm range).
2. A full scale or ⅓ scale (gain) calibration is attempted in the DC Volts function and a negative input signal is applied. Always calibrate the DC Volts function with a positive polarity input signal.
3. A full scale or ⅓ scale (gain) calibration is attempted and the input signal is outside the calibration range (± 7%). For example, a full scale calibration of the 3V range is attempted and the input signal is +3.22V.
4. An AC Volts function calibration is attempted with an input signal other than 3Vac.

e. ACI VAL ERROR - This message is displayed when the 3478A is unable to calculate an AC Current calibration constant. This condition can exist if the calibration constants for the 300mA and 3A DC ranges are incorrect. Always ensure the DC Current function is calibrated before calibrating the AC Current function.

f. CAL FINISHED - A calibration cycle has been successfully completed.

g. CALIBRATING - This message is displayed when the 3478A is calculating calibration constants.

4-57. DC Volts Calibration

4-58. Unless otherwise stated, all calibration signals are applied to the 3478A HI and LO INPUT terminals.

4-59. Equipment Required. The following test equipment is required for the DC Volts Calibration procedure. The equipment is summarized with the critical specifications in Table 4-2.

DC Volts Standard — Datron 4000A or 4707

4-60. Calibration Procedure. Turn on the 3478A and allow a one hour warm-up period. Then, do the following:

a. Reset the 3478A by pressing the front panel blue shift button and then the SGL/TRIG (TEST/RESET) button.

NOTE

Following the reset/self-test, the 3478A is placed in the DC Volts function, Autorange On, Internal Trigger, and 5 digit display mode.

b. Use a small, flat blade screwdriver to set the front panel CAL ENABLE Switch to the Cal Enable position (the slot of the switch must be in the vertical position to allow calibration).

c. Set the 3478A to the single trigger mode by pressing the SGL/TRIG button. Take the 3478A out of Autorange by pressing the downrange button (set the 3478A to the 30mV range).

d. Install a short across the 3478A's HI and LO INPUT terminals.

e. Press the blue shift button and then the LOCAL (CAL) button.

f. Press the SGL/TRIG button once. When the display shows CAL FINISHED, remove the short from the input.

g. Connect the DC Volts Standard output terminals to the 3478A INPUT terminals as shown in Figure 4-2. Set the DC Volts Standard for an output of 30mV.

h. Press the blue shift button and then the LOCAL (CAL) button.

i. If the actual output value of the DC Volts Standard is known, use the 3478A uprange or downrange buttons to set the 3478A display to the same value. Then press the SGL/TRIG button. If the actual output is not known or if the Standard has a high enough accuracy, just press the SGL/TRIG button.

j. Remove the DC Volts Standard input from the 3478A. Set the 3478A to the 300mV range by pressing the uprange button. Install a short across the 3478A HI and LO INPUT terminals.

k. Repeat steps e through j on the 300mV range (the DC Volts Standard output should be set to 300mV).

WARNING

The next step uses potentially lethal voltages. Do not touch the DC Volts Standard's output terminals or the 3478A's input terminals. Ensure the DC Volts Standard's output is turned off before moving any connections.

l. Repeat steps e through j on each of the remaining 3478A ranges, increasing the value of the DC Volts Standard output accordingly. The ranges to be calibrated are: 3V, 30V and 300V.

4-61. DC Current Calibration

4-62. The DC Volts Calibration or DC Volts Performance Test should be performed before attempting the DC Current Calibration. The 3478A should be turned on and allowed at least a one hour warm-up.

4-63. Unless otherwise specified, all input signals are applied to the front panel LO and A INPUT terminals.

4-64. Equipment Required. The following test equipment is required for the DC Current Calibration. The test equipment is summarized with the critical specifications in Table 4-2.

DC Current Standard — Datron Model 4000A or 4707

4-65. Calibration Procedure. Do the following:

a. Reset the 3478A by pressing the blue shift button and then the SGL/TRIG (TEST/RESET) button.

b. Set the 3478A front panel CAL ENABLE Switch to the Calibration Enable position (the slot must be vertical to allow calibration).

c. Set the 3478A to the Single Trigger mode, DC Current function, and the 300mA range (take the 3478A out of the Autorange function by pressing the downrange button).

d. Leave the 3478A INPUT terminals open. Press the blue shift button and then the LOCAL (CAL) button.

e. Press the SGL/TRIG button once. Wait for the display to show the message CAL FINISHED.

f. Uprange the 3478A to the 3A range. Repeat steps d and e.

g. Connect the DC Current Standard's output to the 3478A LO and A INPUT terminals as shown in Figure 4-4.

h. Set the 3478A to the 300mA range. Set the DC Current Standard for an output of +100mA.

i. Press the blue shift button and then the LOCAL (CAL) button.

j. If the actual output value of the DC Current Standard is known, use the 3478A uprange or downrange buttons to set the 3478A display to the same value. Then press the SGL/TRIG button. If the actual output is not known or if the DC Current Standard has a high enough accuracy, just press the SGL/TRIG button.

k. Uprange the 3478A to the 3A range. Set the DC Current Standard for an output of +1A.

l. Repeat steps i and j.

m. Turn off the DC Current Standard's output. Disconnect the test leads. This concludes the DC Current calibration procedure.

4-66. AC Volts Calibration

4-67. The AC Volts function is calibrated using only one input signal. The signal required is 3V at 1KHz. During

the calibration cycle the 3478A will automatically set the gain at full scale on the 3V range and at 1/10 scale on the 30V range. These two gain adjustments are then applied to all other ranges in the AC Volts function.

4-68. The DC Volts Calibration or DC Volts Performance Test should be performed before attempting the AC Volts Calibration. The 3478A should be turned on and allowed to warm-up for at least one hour.

4-69. Unless otherwise stated, all input signals are applied to the 3478A HI and LO INPUT terminals.

4-70. Equipment Required. The following test equipment is required for the AC Volts Calibration. The test equipment is summarized with the critical specifications in Table 4-2.

AC Voltage Standard — Datron 4200 or 4707

4-71. Calibration Procedure. Do the following:

a. Reset the 3478A by pressing the blue shift button and then the SGL/TRIG (TEST/RESET) button.

b. Set the front panel CAL ENABLE switch to the Calibration Enable position (the slot must be vertical to allow calibration).

c. Set the 3478A to the AC Volts function and the 3V range.

d. Set the Single Trigger mode by pressing the SGL/TRIG button.

e. Connect the AC Volts Standard's output to the 3478A HI and LO INPUT terminals as shown in Figure 4-5.

f. Set the AC Volts Standard for an output of 3V at 1KHz.

g. Press the blue shift button and then the LOCAL (CAL) button.

h. If the actual output value of the AC Volts Standard is known, use the 3478A uprange or downrange buttons to set the 3478A display to the same value. Then press the SGL/TRIG button. If the actual output value is not known or if the AC Volts Standard has a high enough accuracy, just press the SGL/TRIG button.

i. Wait for the 3478A display to show the message CAL FINISHED. Turn off the AC Volts Standard's output. Disconnect the test leads. This concludes the AC Volts function calibration.

4-72. AC Current Calibration

4-73. The AC Current Calibration Constants are calculated using the DC Volts, DC Current, and AC Volts calibration constants. For this reason, no AC Current calibration is required provided the DC Volts, DC Current, and AC Volts functions have been calibrated. The following procedure is provided for cases where only the AC Current function is to be calibrated or for cases where the AC Current Performance Test (see paragraph 4-38) has failed.

4-74. Unless otherwise stated, all signals are applied to the 3478A front panel LO and A INPUT terminals.

4-75. The AC Current function can only be calibrated using full scale inputs.

4-76. Equipment Required. The following test equipment is required for the AC Current calibration procedure. The test equipment is summarized with the critical specifications in Table 4-2.

AC Current Standard — Datron Model 4200 or 4707

4-77. Calibration Procedure. Make sure the 3478A has been turned on and allowed to warm-up for at least one hour. Then do the following:

a. Reset the 3478A by pressing the blue shift button and then the SGL/TRIG (TEST/RESET) button.

b. Set the 3478A front panel CAL ENABLE Switch to the Calibration Enable position (the slot must be vertical to allow calibration).

c. Set the 3478A to the Single Trigger mode, AC Current function and 300mA range (take the 3478A out of the Autorange function by pressing the downrange button).

d. Connect the AC Current Standard's output to the 3478A LO and A INPUT terminals as shown in Figure 4-6.

e. Set the AC Current Standard for an output of 300mA at 1KHz.

f. Press the blue shift button and then the LOCAL (CAL) button.

g. If the actual value of the AC Current Standard is known, use the 3478A uprange or downrange buttons to set the 3478A display to the same value. Then press the SGL/TRIG button. If the actual output is not known or if the Standard accuracy is high enough, just press the SGL/TRIG button.

h. Turn off the AC Current Standard output. Disconnect the test leads. This concludes the AC Current Calibration Procedure.

4-78. Ohms Calibration

4-79. The 3478A can be calibrated in either the 4-Wire

or 2-Wire Ohms function. It cannot be calibrated in both. The 3478A should be calibrated in the function in which it will be used.

4-80. If the calibration is to be done in the 2-Wire Ohms function, the Resistance Standard is connected to the HI and LO INPUT terminals as shown in Figure 4-7. If the calibration is to be done in the 4-Wire Ohms function, the Resistance Standard must be connected to the HI and LO INPUT terminals and the HI and LO SENSE terminals as shown in Figure 4-8.

4-81. The 3478A's Ohms function can be calibrated using either full scale or ⅓ scale inputs. In the following procedure the ⅓ scale inputs are shown in parenthesis.

4-82. Equipment Required. The following test equipment is required for the Ohms Calibration Procedure. The test equipment is summarized with the critical specifications in Table 4-2.

Resistance Standard — Datron Model 4200 or 4707

4-83. Calibration Procedure. Ensure the 3478A has been turned on and allowed to warm-up for at least one hour. Then do the following:

a. Reset the 3478A by pressing the blue shift button and then the SGL/TRIG (TEST/RESET) button.

b. Set the front panel CAL ENABLE Switch to the Calibration Enable position (the slot must be vertical to allow calibration).

c. Set the 3478A to the Single Trigger mode, 2-Wire or 4-Wire Ohms function (see paragraphs 4-80 and 4-81), and the 30Ω range (take the 3478A out of the Autorange function by pressing the downrange button).

d. Install a short across the 3478A HI and LO INPUT terminals. If in the 4-Wire Ohms function, also short the SENSE terminals to the INPUT terminals (see Figure 4-9).

e. Press the blue shift button and then the LOCAL (CAL) button.

f. Press the SGL/TRIG button once. Wait for the display to show the message CAL FINISHED.

g. Remove the short and connect the Resistance Standard to the 3478A. The 2-Wire Ohms connection is shown in Figure 4-7 and the 4-Wire Ohms connection is shown in Figure 4-8.

h. Set the Resistance Standard for 30Ω (10Ω).

i. Press the blue shift button and then the LOCAL (CAL) button.

j. If the actual value of the Resistance Standard is known, use the 3478A uprange or downrange buttons to set the 3478A display to the same value. Then press the SGL/TRIG button. If the actual value is not known or if the Standard has a high enough accuracy, just press the SGL/TRIG button. Wait for the display to show the message CAL FINISHED.

k. Remove the Resistance Standard test leads from the 3478A INPUT (and SENSE) terminals. Uprange the 3478A to the 300Ω range.

l. Repeat steps d through j increasing the value of the Resistance Standard in step h to 300Ω (100Ω).

m. Repeat steps d through k on each of the remaining 3478A ranges, increasing the value of the Resistance Standard accordingly. The ranges to be calibrated are: 3KΩ, 30KΩ, 300KΩ, 3MΩ, and 30MΩ.

n. Remove the test leads. This concludes the Ohms Calibration Procedure.

4-84. REMOTE CALIBRATION

4-85. General

4-86. The 3478A can be remotely calibrated using the HP-IB (Hewlett-Packard Interface Bus). This is accomplished by using a computer to setup the 3478A to the required range, function, and calibration mode instead of doing it from the front panel.

4-87. Remote calibration uses the same test equipment, including connections to the 3478A, as is used in local calibration. In addition, both remote and local calibration procedures are basically the same in that zero scale and full or 1/3 scale calibration signals are used. It is therefore necessary to know how to calibrate the 3478A locally. Read the calibration procedures in paragraphs 4-48 to 4-83 before attempting to calibrate remotely.

4-88. The following paragraph has an example on how to remotely calibrate the 3478A. In the example, the 3478A is calibrated on the 3V Range by remotely sending the appropriate program codes. Then the value of the calibration signal is remotely sent to the 3478A's display. Once this is done, the program code to calibrate the instrument is sent. The example shows how to send the program codes using a Model HP-85B Computer. For information on programming the 3478A, refer to the 3478A Operator's Manual or Section III of this manual.

4-89. Remote Calibration Example

4-90. Connect the 3478A to the HP-IB and make sure the instrument's HP-IB address is set to "23" (see Section II of this manual to set the address). Using a small flat blade screwdriver, set the front panel CAL ENABLE switch to the calibration enable position (the slot of the switch is in the vertical position). A "C" should now appear on the right end of the numbers in the 3478A's

display indicating that calibration is now enabled. Calibrate the 3478A on the 3V Range and DC Volts Function by doing the following steps.

a. The 3478A is first set to Remote and Listen by the computer. Then program codes "F1R0N5Z1T1" are sent to the 3478A to set the instrument to the DC Volts Function (F1), 3V Range (R0), 5 1/2 Digits Displayed (N5), Autozero On (Z1), and Internal Trigger (T1). This is shown as follows:

```
OUTPUT 723 ;"F1R0N5Z1T1"
```

The "OUTPUT 723" statement sets the 3478A to Remote and Listen, and "F1R0N5Z1T1" are the program codes sent to the instrument to setup the instrument.

b. After the 3478A is setup to the desired function and range, apply the zero volts calibration signal to the instrument. This is done by shorting the HI and LO INPUT Terminals. Once this is performed, the value in the 3478A's display has to be set to the value of the calibration signal (i.e., 0V). This is done by sending program codes "D2+000000". Code "D2" enables the display to receive "000000". Since the 3478A is calibrated in the 5 1/2 Digit Mode, make sure that six zeroes (i.e., "000000") are sent instead of five or less zeros. Also, the "+" between D2 and 000000 needs to be there for the display to accept the numbers correctly. The program codes are sent as follows:

```
OUTPUT 723 ;"D2+000000"
```

c. The 3478A is now calibrated by sending program code "C" to the instrument. The 3478A will then display "CALIBRATING", while it is calculating the zero offset calibration constant. When finished, "CAL FINISHED" will be displayed for about two seconds. Zero calibration is then completed. Program code "C" is sent as follows:

```
OUTPUT 723 ;"C"
```

d. After zero calibration is completed, apply either a full scale (3V) or 1/3 scale (1V) calibration signal to the 3478A's INPUT Terminals. Then set the display to the applied value. Since in this example the applied value is +2.99998V, send program codes "D2+2.99998" to the 3478A as follows:

```
OUTPUT 723 ;"D2+2.99998"
```

e. Calibrate the 3478A by sending program code "C" (see step c). After the calibration constants are calculated, "CAL FINISHED" will be displayed by the 3478A.

f. The 3V Range in the DC Volts Function is now calibrated. Calibration of the rest of the ranges and functions is similar. Remember, the same rules that apply for local calibration (e.g., AC Volts is calibrated on only one range, etc.) also apply for remote calibration. Also, when calibrating at full or 1/3 scale, make sure the 3478A receives the correct information. For example, to calibrate the gain by applying 1V, send program codes "D2+1.00000" to the 3478A. The decimal point included in the number is not necessary; it is only there to show the value of the calibration source.

PERFORMANCE TEST CARD
24 HOUR LIMITS

Hewlett-Packard Model 3478A

Digital Multimeter

Serial Number _____

Test Performed By _____

Date _____

Reference Temperature _____

DC Volts Test

Step#	Input to 3478A	Set-Up and Configuration	High Limit	Reading	Low Limit	Test Pass	Test Fail
1	Open	Press TEST/RESET				___	___
2	Short	30mV Range	+00.0040mV	_____	−00.0040mV	___	___
3	Short	300mV Range	+000.004mV	_____	−000.004mV	___	___
4	Short	3V Range	+0.00002V	_____	−0.00002V	___	___
5	Short	30V Range	+00.0003V	_____	−00.0003V	___	___
6	Short	300V Range	+000.002V	_____	−000.002V	___	___
7	+30mV	30mV Range	+30.0115mV	_____	+29.9885mV	___	___
8	+300mV	300mV Range	+300.016mV	_____	+299.984mV	___	___
9	+300mV	3V Range	+0.30003V	_____	+0.29997V	___	___
10	+1V	3V Range	+1.00005V	_____	+0.99995V	___	___
11	−1V	3V Range	−0.99995V	_____	−1.00005V	___	___
12	−3V	3V Range	−2.99989V	_____	−3.00011V	___	___
13	+3V	3V Range	+3.00011V	_____	+2.99989V	___	___
14	+3V	Autozero Off	+3.00014V	_____	+2.99986V	___	___
15		Autozero On					
16	+3V	4 Digit Disp	+3.0002V	_____	+2.9998V	___	___
17	+3V	3 Digit Disp	+3.001V	_____	+2.999V	___	___
18		5 Digit Disp					
19	+3V	30V Range	+03.0004V	_____	+02.9996V	___	___
20	+10V	30V Range	+10.0007V	_____	+09.9993V	___	___
21	+30V	30V Range	+30.0015V	_____	+29.9985V	___	___
22	+30V	Autozero Off	+30.0026V	_____	+29.9974V	___	___
23		Autozero On					
24	+300V	300V Range	+300.014V	_____	+299.986V	___	___
25	Open	30mV Range					
26	See Below	CMR Test					

CMR Test

1. Connect a 1K Ohm resistor between the HI and LO INPUT Terminals of the 3478A
2. Note the 3478A's reading.
3. Apply 450V dc between the 3478A's chassis (rear panel) and HI INPUT Terminal.
4. The 3478A should remain within .045mV of the reading in step 2.

PERFORMANCE TEST CARD
90 DAY LIMITS

Hewlett-Packard Model 3478A

Digital Multimeter

Serial Number_____

Test Performed By_____

Date_____

Reference Temperature_____

DC Volts Test

Step#	Input to 3478A	Set-Up and Configuration	High Limit	Reading	Low Limit	Test Pass	Test Fail
1	Open	Press TEST/RESET				___	___
2	Short	30mV Range	+00.0040mV	_____	−00.0040mV	___	___
3	Short	300mV Range	+000.005mV	_____	−000.005mV	___	___
4	Short	3V Range	+0.00002V	_____	−0.00002V	___	___
5	Short	30V Range	+00.0004V	_____	−00.0004V	___	___
6	Short	300V Range	+000.002V	_____	−000.002V	___	___
7	+30mV	30mV Range	+30.0123mV	_____	+29.9877mV	___	___
8	+300mV	300mV Range	+300.020mV	_____	+299.980mV	___	___
9	+300mV	3V Range	+0.30003V	_____	+0.29997V	___	___
10	+1V	3V Range	+1.00006V	_____	+0.99994V	___	___
11	−1V	3V Range	−0.99994V	_____	−1.00006V	___	___
12	−3V	3V Range	−2.99986V	_____	−3.00014V	___	___
13	+3V	3V Range	+3.00014V	_____	+2.99986V	___	___
14	+3V	Autozero Off	+3.00017V	_____	+2.99983V	___	___
15		Autozero On					
16	+3V	4 Digit Disp	+3.0002V	_____	+2.9998V	___	___
17	+3V	3 Digit Disp	+3.001V	_____	+2.999V	___	___
18		5 Digit Disp					
19	+3V	30V Range	+03.0006V	_____	+02.9994V	___	___
20	+10V	30V Range	+10.0009V	_____	+09.9991V	___	___
21	+30V	30V Range	+30.0019V	_____	+29.9981V	___	___
22	+30V	Autozero Off	+30.0030V	_____	+29.9970V	___	___
23		Autozero On					
24	+300V	300V Range	+300.017V	_____	+299.983V	___	___
25	Open	30mV				___	___
26	See Below	CMR Test				___	___

CMR Test

1. Connect a 1K Ohm resistor between the HI and LO INPUT Terminals of the 3478A.
2. Note the 3478A's reading.
3. Apply 450V dc between the 3478A's chassis (rear panel) and HI INPUT Terminal.
4. The 3478A should remain within .045mV of the reading in step 2.

PERFORMANCE TEST CARD
1 YEAR LIMITS

Hewlett-Packard Model 3478A

Digital Multimeter

Serial Number_____

Test Performed By_____

Date_____

Reference Temperature_____

DC Volts Test

Step#	Input to 3478A	Set-Up and Configuration	High Limit	Reading	Low Limit	Test Pass	Test Fail
1	Open	Press TEST/RESET				___	___
2	Short	30mV Range	+00.0040mV	_____	−00.0040mV	___	___
3	Short	300mV Range	+000.005mV	_____	−000.005mV	___	___
4	Short	3V Range	+0.00002V	_____	−0.00002V	___	___
5	Short	30V Range	+00.0004V	_____	−00.0004V	___	___
6	Short	300V Range	+000.002V	_____	−000.002V	___	___
7	+30mV	30mV Range	+30.0145mV	_____	+29.9855mV	___	___
8	+300mV	300mV Range	+300.026mV	_____	+299.974mV	___	___
9	+300mV	3V Range	+0.30004V	_____	+0.29996V	___	___
10	+1V	3V Range	+1.00008V	_____	+0.99992V	___	___
11	−1V	3V Range	−0.99992V	_____	−1.00008V	___	___
12	−3V	3V Range	−2.99980V	_____	−3.00020V	___	___
13	+3V	3V Range	+3.00020V	_____	+2.99980V	___	___
14	+3V	Autozero Off	+3.00023V	_____	+2.99977V	___	___
15		Autozero On					
16	+3V	4 Digit Disp	+3.0003V	_____	+2.9997V	___	___
17	+3V	3 Digit Disp	+3.001V	_____	+2.999V	___	___
18		5 Digit Disp					
19	+3V	30V Range	+03.0006V	_____	+02.9994V	___	___
20	+10V	30V Range	+10.0011V	_____	+09.9989V	___	___
21	+30V	30V Range	+30.0025V	_____	+29.9975V	___	___
22	+30V	Autozero Off	+30.0036V	_____	+29.9964V	___	___
23		Autozero On					
24	+300V	300V Range	+300.023V	_____	+299.977V	___	___
25	Open	30mV Range				___	___
26	See Below	CMR Test				___	___

CMR Test

1. Connect a 1K Ohm resistor between the HI and LO INPUT Terminals of the 3478A.
2. Note the 3478A's reading.
3. Apply 450V dc between the 3478A's chassis (rear panel) and HI INPUT Terminal.
4. The 3478A should remain within .045mV of the reading in step 2.

PERFORMANCE TEST CARD

90 DAY LIMITS

Hewlett-Packard Model 3478A

Digital Multimeter

Test Performed By_____

Date_____

Serial Number_____

Reference Temperature_____

DC Current Test

Step#	Input to 3478A	Set-Up and Configuration	High Limit	Reading	Low Limit	Test Pass	Test Fail
1	Open	Press TEST/RESET					
2	Open	DCI Function	+000.040mA	_____	-000.040mA	_____	_____
3	Open	3A Range	+0.00006A	_____	-0.00006A	_____	_____
4	+100mA	300mA Range	+100.150mA	_____	+099.850mA	_____	_____
5	+1A	3A Range	+1.00146A	_____	+0.99854A	_____	_____

1 YEAR LIMITS

Hewlett-Packard Model 3478A

Digital Multimeter

Test Performed By_____

Date_____

Serial Number_____

Reference Temperature_____

DC Current Test

Step#	Input to 3478A	Set- Up and Configuration	High Limit	Reading	Low Limit	Test Pass	Test Fail
1	Open	Press TEST/RESET					
2	Open	DCI Function	+000.040mA	_____	-000.040mA	_____	_____
3	Open	3A Range	+0.00006A	_____	-0.00006A	_____	_____
4	+100mA	300mA Range	+100.190mA	_____	+099.810mA	_____	_____
5	+1A	3A Range	+1.00176A	_____	+0.99824A	_____	_____

PERFORMANCE TEST CARD
1 YEAR LIMITS

Hewlett-Packard Model 3478A

Digital Multimeter

Serial Number_____

Test Performed By_____

Date_____

Reference Temperature_____

AC Volts Test

Step#	Input to 3478A	Set-Up and Configuration	High Limit	Reading	Low Limit	Test Pass	Test Fail
1	Open	Press TEST/RESET				___	___
2	Open	ACV Function					
3	.028V,20KHz	300mV Range	028.176mV	_____	027.824mV	___	___
4	0.28V,20KHz	300mV Range	280.680mV	_____	279.320mV	___	___
5	0.28V,20KHz	3V Range	0.28126V	_____	0.27874V	___	___
6	1.5V,20KHz	3V Range	1.50370V	_____	1.49630V	___	___
7	2.8V,20KHz	3V Range	2.80630V	_____	2.79370V	___	___
8	2.8V,20KHz	30V Range	02.8126V	_____	02.7874V	___	___
9	28V,20KHz	30V Range	28.0630V	_____	27.9370V	___	___
10	28V,20KHz	300V Range	028.137V	_____	027.863V	___	___
11	280V,20KHz	300V Range	280.742V	_____	279.258V	___	___
12	0.28V,50KHz	300mV Range	281.269mV	_____	278.731mV	___	___
13	2.8V,50KHz	3V Range	2.80868V	_____	2.79132V	___	___
14	28V,50KHz	30V Range	28.0868V	_____	27.9132V	___	___
15	280V,50KHz	300V Range	281.316V	_____	278.684V	___	___
16	0.28V,100KHz	300mV Range	284.200mV	_____	275.800mV	___	___
17	0.28V,100KHz	3V Range	0.29024V	_____	0.26976V	___	___
18	2.8V,100KHz	3V Range	2.83216V	_____	2.76784V	___	___
19	15V,100KHz	30V Range	15.2085V	_____	14.7915V	___	___
20	28V,100KHz	30V Range	28.3216V	_____	27.6784V	___	___
21	280V,100KHz	300V Range	283.524V	_____	276.476V	___	___
22	25V,300KHz	30V Range	28.8970V	_____	22.1030V	___	___
23	2.8V,50Hz	3V Range	2.8139V	_____	2.78609V	___	___
24	2.8V,20Hz	3V Range	2.83294V	_____	2.76706V	___	___

PERFORMANCE TEST CARD
1 YEAR LIMITS

Hewlett – Packard Model 3478A

Digital Multimeter

Serial Number_____

Test Performed By_____

Date_____

Reference Temperature_____

AC Current Test

Step#	Input to 3478A	Set-Up and Configuration	High Limit	Reading	Low Limit	Test Pass	Test Fail
1	Open	Press TEST/RESET				___	___
2	Open	ACI Function					
3	.03A,5KHz	300mA Range	030.379mA	_____	029.621mA	___	___
4	0.1A,5KHz	300mA Range	100.883mA	_____	099.117mA	___	___
5	1A,5KHz	3A Range	1.01583A	_____	0.98417A	___	___

PERFORMANCE TEST CARD
24 HOUR LIMITS

Hewlett-Packard Model 3478A

Digital Multimeter

Serial Number_____

Test Performed By_____

Date_____

Reference Temperature_____

4-Wire Ohms Test

Step#	Input to 3478A	Set-Up and Configuration	High Limit	Reading	Low Limit	Test Pass	Test Fail
1	Open	Press TEST/RESET				_____	_____
2	Short	Ohms Function	00.0035	_____	-00.0035	_____	_____
3	Short	300 Range	000.004	_____	-000.004	_____	_____
4	Short	3K Range	0.00002K	_____	-0.00002K	_____	_____
5	Short	30K Range	00.0002K	_____	-00.0002K	_____	_____
6	Short	300K Range	000.002K	_____	-000.0002K	_____	_____
7	Short	3M Range	0.00002M	_____	-0.00002M	_____	_____
8	Short	30M Range	00.0002M	_____	-00.0002M	_____	_____
9	30 ohm	30 Range	30.0104	_____	29.9896	_____	_____
(9)	10 ohm		10.0058	_____	09.9942	_____	_____
10	300 ohm	300 Range	300.018	_____	299.982	_____	_____
(10)	100 ohm		100.009	_____	099.991	_____	_____
11	3K ohm	3K Range	3.00013K	_____	2.99987K	_____	_____
(11)	1K ohm		1.00006K	_____	0.99994K	_____	_____
12	30K ohm	30K Range	30.0013K	_____	29.9987K	_____	_____
(12)	10K ohm		10.0006K	_____	09.9994K	_____	_____
13	300K ohm	300K Range	300.013K	_____	299.987K	_____	_____
(13)	100K ohm		100.006K	_____	099.994K	_____	_____
14	3M ohm	3M Range	3.00018M	_____	2.99982M	_____	_____
(14)	1M ohm		1.00007M	_____	0.99993M	_____	_____
15	30M ohm	30M Range	30.0110M	_____	29.9890M	_____	_____
(15)	10M ohm		10.0038M	_____	09.9962M	_____	_____

PERFORMANCE TEST CARD
90 DAY LIMITS

Hewlett-Packard Model 3478A

Digital Multimeter

Test Performed By_____

Date_____

Serial Number_____

Reference Temperature_____

4-Wire Ohms Test

Step#	Input to 3478A	Set-Up and Configuration	High Limit	Reading	Low Limit	Test Pass	Test Fail
1	Open	Press TEST/RESET				_____	_____
2	Short	Ohms Function	00.0041	_____	-00.0041	_____	_____
3	Short	300 Range	000.005	_____	-000.005	_____	_____
4	Short	3K Range	0.00002K	_____	-0.00002K	_____	_____
5	Short	30K Range	00.0002K	_____	-00.0002K	_____	_____
6	Short	300K Range	000.002K	_____	-000.002K	_____	_____
7	Short	3M Range	0.00002M	_____	-0.00002M	_____	_____
8	Short	30M Range	00.0002M	_____	-00.0002M	_____	_____
9	30 ohm	30 Range	30.0122	_____	29.9878	_____	_____
(9)	10 ohm		10.0068	_____	09.9932	_____	_____
10	300 ohm	300 Range	300.041	_____	299.958	_____	_____
(10)	100 ohm		100.017	_____	099.983	_____	_____
11	3K ohm	3K Range	3.00035K	_____	2.99965K	_____	_____
(11)	1K ohm		1.00013K	_____	0.99987K	_____	_____
12	30K ohm	30K Range	30.0035K	_____	29.9965K	_____	_____
(12)	10K ohm		10.0013K	_____	09.9987K	_____	_____
13	300K ohm	300K Range	300.035K	_____	299.965K	_____	_____
(13)	100K ohm		100.013K	_____	099.987K	_____	_____
14	3M ohm	3M Range	3.00035M	_____	2.99965M	_____	_____
(14)	1M ohm		1.00013M	_____	0.99987M	_____	_____
15	30M ohm	30M Range	30.0200M	_____	29.9800M	_____	_____
(15)	10M ohm		10.0068M	_____	09.9932M	_____	_____

PERFORMANCE TEST CARD

1 YEAR LIMITS

Hewlett-Packard Model 3478A

Digital Multimeter

Test Performed By_____

Date_____

Serial Number_____

Reference Temperature_____

4-Wire Ohms Test

Step#	Input to 3478A	Set-Up and Configuration	High Limit	Reading	Low Limit	Test Pass	Test Fail
1	Open	Press TEST/RESET				_____	_____
2	Short	Ohms Function	00.0041	_____	-00.0041	_____	_____
3	Short	300 Range	000.005	_____	-000.005	_____	_____
4	Short	3K Range	0.00002K	_____	-0.00002K	_____	_____
5	Short	30K Range	00.0002K	_____	-00.0002K	_____	_____
6	Short	300K Range	000.002K	_____	-000.002K	_____	_____
7	Short	3M Range	0.00002M	_____	-0.00002M	_____	_____
8	Short	30M Range	00.0002M	_____	-00.0002M	_____	_____
9	30 ohm	30 Range	30.0143	_____	29.9857	_____	_____
(9)	10 ohm		10.0075	_____	09.9925	_____	_____
10	300 ohm	300 Range	300.056	_____	299.944	_____	_____
(10)	100 ohm		100.022	_____	099.978	_____	_____
11	3K ohm	3K Range	3.00050K	_____	2.99950K	_____	_____
(11)	1K ohm		1.00018K	_____	0.99982K	_____	_____
12	30K ohm	30K Range	30.0050K	_____	29.9950K	_____	_____
(12)	10K ohm		10.0018K	_____	09.9982K	_____	_____
13	300K ohm	300K Range	300.050K	_____	299.950K	_____	_____
(13)	100K ohm		100.018K	_____	099.982K	_____	_____
14	3M ohm	3M Range	3.00050M	_____	2.99950M	_____	_____
(14)	1M ohm		1.00018M	_____	0.99982M	_____	_____
15	30M ohm	30M Range	30.0236M	_____	29.9764M	_____	_____
(15)	10M ohm		10.0080M	_____	09.9920M	_____	_____

PERFORMANCE TEST CARD
24 HOUR LIMITS

Hewlett-Packard Model 3478A

Digital Multimeter

Serial Number_____

Test Performed By_____

Date_____

Reference Temperature_____

2Wire Ohms Test

Step#	Input to 3478A	Set-Up and Configuration	High Limit	Reading	Low Limit	Test Pass	Test Fail
1	Open	Press TEST/RESET				_____	_____
2	Short	Ohms Function	00.2035	_____	-00.0035	_____	_____
3	Short	300 Range	000.204	_____	-000.004	_____	_____
4	Short	3K Range	0.00022K	_____	-0.00002K	_____	_____
5	Short	30K Range	00.0004K	_____	-00.0002K	_____	_____
6	Short	300K Range	000.002K	_____	-000.0002K	_____	_____
7	Short	3M Range	0.00002M	_____	-0.00002M	_____	_____
8	Short	30M Range	00.0002M	_____	-00.0002M	_____	_____
9	30 ohm	30 Range	30.2104	_____	29.9896	_____	_____
(9)	10 ohm		10.2058	_____	09.9942	_____	_____
10	300 ohm	300 Range	300.218	_____	299.982	_____	_____
(10)	100 ohm		100.209	_____	099.991	_____	_____
11	3K ohm	3K Range	3.00033K	_____	2.99987K	_____	_____
(11)	1K ohm		1.00026K	_____	0.99994K	_____	_____
12	30K ohm	30K Range	30.0015K	_____	29.9987K	_____	_____
(12)	10K ohm		10.0008K	_____	09.9994K	_____	_____
13	300K ohm	300K Range	300.013K	_____	299.987K	_____	_____
(13)	100K ohm		100.006K	_____	099.994K	_____	_____
14	3M ohm	3M Range	3.00022M	_____	2.99982M	_____	_____
(14)	1M ohm		1.00008M	_____	0.99993M	_____	_____
15	30M ohm	30M Range	30.0113M	_____	29.9890M	_____	_____
(15)	10M ohm		10.0046M	_____	09.9962M	_____	_____

PERFORMANCE TEST CARD
90 DAY LIMITS

Hewlett-Packard Model 3478A

Digital Multimeter

Test Performed By_____

Date_____

Serial Number_____

Reference Temperature_____

2-Wire
Ohms Test

Step#	Input to 3478A	Set-Up and Configuration	High Limit	Reading	Low Limit	Test Pass	Test Fail
1	Open	Press TEST/RESET				_____	_____
2	Short	Ohms Function	00.2041	_____	-00.0041	_____	_____
3	Short	300 Range	000.205	_____	-000.005	_____	_____
4	Short	3K Range	0.00022K	_____	-0.00002K	_____	_____
5	Short	30K Range	00.0004K	_____	-00.0002K	_____	_____
6	Short	300K Range	000.002K	_____	-000.002K	_____	_____
7	Short	3M Range	0.00002M	_____	-0.00002M	_____	_____
8	Short	30M Range	00.0002M	_____	-00.0002M	_____	_____
9	30 ohm	30 Range	30.2122	_____	29.9878	_____	_____
(9)	10 ohm		10.2068	_____	09.9932	_____	_____
10	300 ohm	300 Range	300.241	_____	299.958	_____	_____
(10)	100 ohm		100.217	_____	099.983	_____	_____
11	3K ohm	3K Range	3.00055K	_____	2.99965K	_____	_____
(11)	1K ohm		1.00033K	_____	0.99987K	_____	_____
12	30K ohm	30K Range	30.0038K	_____	29.9965K	_____	_____
(12)	10K ohm		10.0015K	_____	09.9987K	_____	_____
13	300K ohm	300K Range	300.035K	_____	299.965K	_____	_____
(13)	100K ohm		100.013K	_____	099.987K	_____	_____
14	3M ohm	3M Range	3.00039M	_____	2.99965M	_____	_____
(14)	1M ohm		1.00015M	_____	0.99987M	_____	_____
15	30M ohm	30M Range	30.0225M	_____	29.9800M	_____	_____
(15)	10M ohm		10.0076M	_____	09.9932M	_____	_____

PERFORMANCE TEST CARD

1 YEAR LIMITS

Hewlett-Packard Model 3478A

Digital Multimeter

Serial Number_____

Test Performed By_____

Date_____

Reference Temperature_____

2-Wire Ohms Test

Step#	Input to 3478A	Set-Up and Configuration	High Limit	Reading	Low Limit	Test Pass	Test Fail
1	Open	Press TEST/RESET				____	____
2	Short	Ohms Function	00.2041	____	-00.0041	____	____
3	Short	300 Range	000.205	____	-000.005	____	____
4	Short	3K Range	0.00022K	____	-0.00002K	____	____
5	Short	30K Range	00.0004K	____	-00.0002K	____	____
6	Short	300K Range	000.002K	____	-000.002K	____	____
7	Short	3M Range	0.00002M	____	-0.00002M	____	____
8	Short	30M Range	00.0002M	____	-00.0002M	____	____
9	30 ohm	30 Range	30.2143	____	29.9857	____	____
(9)	10 ohm		10.2075	____	09.9925	____	____
10	300 ohm	300 Range	300.256	____	299.944	____	____
(10)	100 ohm		100.222	____	099.978	____	____
11	3K ohm	3K Range	3.00070K	____	2.99950K	____	____
(11)	1K ohm		1.00038K	____	0.99982K	____	____
12	30K ohm	30K Range	30.0052K	____	29.9950K	____	____
(12)	10K ohm		10.0020K	____	09.9982K	____	____
13	300K ohm	300K Range	300.050K	____	299.950K	____	____
(13)	100K ohm		100.018K	____	099.982K	____	____
14	3M ohm	3M Range	3.00055M	____	2.99950M	____	____
(14)	1M ohm		1.00019M	____	0.99982M	____	____
15	30M ohm	30M Range	30.0260M	____	29.9764M	____	____
(15)	10M ohm		10.0088M	____	09.9920M	____	____

SECTION V
REPLACEABLE PARTS

5-1. INTRODUCTION

5-2. This section has information for ordering replacement parts. Table 5-3 lists the parts in alphameric order of their reference designators and indicates the description, -hp- Part Number of each part, together with any applicable notes, and provides the following:

a. Total quantity used in the instrument (QTY column). The total quantity of a part is given the first time the part number appears.

b. Description of the part. (See abbreviations listed in Table 5-1.)

c. Typical manufacturer of the part is a five-digit code. (See Table 5-2 for list of manufacturers.)

d. Manufacturers part number.

5-3. Miscellaneous and Chassis Parts are listed at the end of Table 5-3. A disassembly procedure of the instrument is also included with the Miscellaneous and Chassis Parts listing.

5-4. ORDERING INFORMATION

5-5. To obtain replacement parts, address order or inquiry to your local Hewlett-Packard Office. (Office Locations are listed at the back of this manual.) Identify parts by their Hewlett-Packard Part Numbers. Include instrument model and serial number.

5-6. NON-LISTED PARTS

5-7. To obtain a part that is not listed, include:

a. Instrument Model Number
b. Instrument Serial Number
c. Description of the part.
d. Function and location of the part.

5-8. PARTS CHANGES

5-9. The parts listed in Tables 5-3 and 5-4 pertain to 3478A's with serial prefix 2619. Always refer to Section VI, Backdating, in this manual if repairing or ordering parts for instruments with a prefix earlier than 2619. Parts changes for instruments with serial prefixes above 2619 are documented on a separate manual change sheet.

5-10. 3478A DISASSEMBLY PROCEDURE

5-11. The following disassembly procedure applies to 3478A's with serial prefix 2619 and above. For serial prefixes earlier than 2619, refer to Section VI of this manual.

5-12. In the following procedure, all directions are referenced to the front of the instrument. That is,

Table 5-1. Standard Abbreviations

ABBREVIATIONS

Ag	silver
Al	aluminum
A	ampere(s)
Au	gold
C	capacitor
cer	ceramic
coef	coefficient
com	common
comp	composition
conn	connection
dep	deposited
DPDT	double-pole double-throw
DPST	double-pole single-throw
elect	electrolytic
encap	encapsulated
F	farad(s)
FET	field effect transistor
fxd	fixed
GaAs	gallium arsenide
GHz	gigahertz = 10^{+9} hertz
gd	guard(ed)
Ge	germanium
gnd	ground(ed)
H	henry(ies)
Hg	mercury
Hz	hertz (cycle(s) per second)
ID	inside diameter
impg	impregnated
incd	incandescent
ins	insulation(ed)
kΩ	kilohm(s) = 10^{+3} ohms
kHz	kilohertz = 10^{+3} hertz
L	inductor
lin	linear taper
log	logarithmic taper
mA	milliampere(s) = 10^{-3} amperes
MHZ	megahertz = 10^{+6} hertz
MΩ	megohm(s) = 10^{+6} ohms
met film	metal film
mfr	manufacturer
ms	millisecond
mtg	mounting
mV	millivolt(s) = 10^{-3} volts
μF	microfarad(s)
μs	microsecond(s)
μV	microvolt(s) = 10^{-6} volts
my	Mylar ®
nA	nanoampere(s) = 10_{-9} amperes
NC	normally closed
Ne	neon
NO	normally open
NPO	negative positive zero (zero temperature coefficient)
ns	nanosecond(s) = 10^{-9} seconds
nsr	not separately replaceable
Ω	ohm(s)
obd	order by description
OD	outside diameter
p	peak
pA	picoampere(s)
pc	printed circuit
pF	picofarad(s) 10^{-12} farads
piv	peak inverse voltage
p/o	part of
pos	position(s)
poly	polystyrene
pot	potentiometer
p-p	peak-to-peak
ppm	parts per million
prec	precision (temperature coefficient, long term stability and/or tolerance)
R	resistor
Rh	rhodium
rms	root-mean-square
rot	rotary
Se	selenium
sect	section(s)
Si	silicon
sl	slide
SPDT	single-pole double-throw
SPST	single-pole single-throw
Ta	tantalum
TC	temperature coefficient
TiO_2	titanium dioxide
tog	toggle
tol	tolerance
trim	trimmer
TSTR	transistor
V	volt(s)
vacw	alternating current working voltage
var	variable
vdcw	direct current working voltage
W	watt(s)
w/	with
wiv	working inverse voltage
w/o	without
ww	wirewound
*	optimum value selected at factory, average value shown (part may be omitted)
**	no standard type number assigned selected or special type

® Dupont de Nemours

DESIGNATORS

A	assembly
B	motor
BT	battery
C	capacitor
CR	diode or thyristor
DL	delay line
DS	lamp
E	misc electronic part
F	fuse
FL	filter
HR	heater
IC	integrated circuit
J	jack
K	relay
L	inductor
M	meter
MP	mechanical part
P	plug
Q	transistor
QCR	transistor-diode
R(p)	resistor(pack)
RT	thermistor
S	switch
T	transformer
TB	terminal board
TC	thermocouple
TP	test point
TS	terminal strip
U	microcircuit
V	vacuum tube, neon bulb, photocell, etc.
W	cable
X	socket
XDS	lampholder
XF	fuseholder
Y	crystal
Z	network

Table 5-2. Code List of Manufacturers

Mfr. No.	Manufacturer Name	Address
0049D	United Chemicon Inc	
01121	Allen-Bradley Co	Milwaukee WI 53204
01295	Texas Instr Inc Semicond Cmpnt Div	Dallas TX 75222
0192B	RCA Corp Solid State Div	Somerville NJ 08876
03888	KDI Pyrofilm Corp	Whippany NJ 07981
04713	Motorola Semiconductor Products	Phoenix AZ 85062
06665	Precision Monolithics Inc	Santa Clara CA 95050
07263	Fairchild Semiconductor Div	Mountain View CA 94042
07716	TRW Inc Burlington Div	Burlington IA 52601
11236	Cts of Berne Inc	Berne IN 46711
12969	Unitrode Corp	Watertown MA 02172
14936	General Instr Corp Semidon Prod Gp	Hicksville NY 11802
24355	Analog Devices Inc	Norwood MA 02062
24546	Corning Glass Works (Bradford)	Bradford PA 16701
27014	National Semiconductor Corp	Santa Clara CA 95051
28480	Hewlett-Packard Co Corporate Hq	Palo Alto CA 94304
56289	Sprague Electric Co	North Adams MA 01247
75915	Littlefuse Inc	Des Plaines IL 60016

references to the right side of the instrument refer to the right side as seen when looking straight-on at the front panel.

a. Locate the cover mounting screw at the bottom rear of the instrument. Loosen and remove the screw.

b. Locate the two mounting screws on the rear bezel. Loosen the two screws and remove the bezel. The screws are captive in the rear bezel.

c. Remove the cover by sliding it off the rear of the instrument chassis. Most troubleshooting and repair can be accomplished with the instrument in this condition.

d. Locate and unplug W502 (the HP-IB Cable) from the motherboard. W502 is located between the power transformer and the rear chassis.

e. Locate and unplug J530 and J531 from the motherboard. J530 is the purple VM COMP wire and J531 is the yellow EXT TRIG wire. Both J530 and J 531 are located near the rear chassis.

f. Locate and remove the screw holding the green-yellow ground wire to the outside rear left-side of the chassis. After the screw is removed, place the wire inside the chassis.

g. Locate and remove the screw holding the brown ground wire to the outside right front-side of the chassis. After the screw is removed, place the wire inside the the chassis.

h. Unplug W3 from U760. U760 is the regulator IC and is mounted inside the chassis on the left-side. Leave U760 mounted to the chassis.

i. Locate the power switch mounting screws on the left side chassis. Loosen, but do not remove the screws. When loose, slide the power switch assembly up and out of the chassis.

j. Locate the power transformer mounting screws and nuts. Remove the screws and nuts. The transformer is mounted to the motherboard and will stay in place.

k. Locate and remove the four wires from the rear input terminals.

l. Locate the two cable clamps on the right side of the chassis. Open the clamps and remove all the wires.

m. The motherboard and front panel can now be removed from the chassis as an assembly. Set the 3478A on its side with the front panel facing you.

n. Gently pry the top and bottom of the front bezel apart so that the molded tabs on the front bezel clear the front panel.

o. While holding the front bezel apart, gently push the motherboard and front panel assembly out through the front bezel. Do apply excessive force. The front bezel can be released when the front panel has cleared the molded tabs. The front panel and motherboard assembly will now slide clear of the chassis, out through the front bezel.

p. Remove the front bezel from the chassis by gently bending the chassis sides together until the threaded inserts clear the front bezel molded holes.

q. The front panel assembly can now be removed from the motherboard. Locate and unplug the four wires from the front panel input terminals.

r. Locate and unplug the front panel brown ground wire from the motherboard.

s. Unplug the ribbon display cable from the display board. Be careful. The ribbon connector is delicate.

t. Locate and unplug the yellow amps input terminal wire from the motherboard.

u. Loosen and remove the two screws in the bottom of the front panel connector. The motherboard and front panel can now be separated.

v. To remove the display assembly from the front panel, loosen and remove the two screws holding the plastic display clamps.

Table 5-3. Replaceable Parts

Reference Designation	HP Part Number	C D	Qty	Description	Mfr Code	Mfr Part Number
A1	03478-66501	2	1	PC ASSEMBLY-MOTHER BOARD	28480	03478-66501
A1BT701	1420-0278	7	1	BATTERY 3V .95A-HR LI/S-DIOX W-FLEX	28480	1420-0278
A1C101	0160-6839	5	3	CAPACITOR-FXD 470PF ±2% 630VDC	28480	0160-6839
A1C102	0160-6839	5		CAPACITOR-FXD 470PF ±2% 630VDC	28480	0160-6839
A1C103	0160-6839	5		CAPACITOR-FXD 470PF ±2% 630VDC	28480	0160-6839
A1C105	0160-4571	8	23	CAPACITOR-FXD .1UF +80-20% 50VDC CER	28480	0160-4571
A1C106	0160-4571	8		CAPACITOR-FXD .1UF +80-20% 50VDC CER	28480	0160-4571
A1C107	0160-4571	8		CAPACITOR-FXD .1UF +80-20% 50VDC CER	28480	0160-4571
A1C108	0160-4571	8		CAPACITOR-FXD .1UF +80-20% 50VDC CER	28480	0160-4571
A1C201	0160-4801	7	1	CAPACITOR-FXD 100PF +-5% 100VDC CER	28480	0160-4801
A1C202	0160-3847	7	7	CAPACITOR-FXD .01UF +100-0% 50VDC CER	28480	0160-3847
A1C203	0160-3847	0	2	CAPACITOR-FXD .01UF +100-0% 50VDC CER	28480	0160-3847
A1C204	0160-6396	9	1	CAPACITOR-FXD 470PF ± 10% 200VDC	28480	0160-6396
A1C205	0160-6386	7	1	CAPACITOR-FXD 24PF ±1PF 630VDC	28480	0160-6386
A1C301	0160-5386	5	1	CAPACITOR-FXD .15UF 630VDC	28480	0160-5386
A1C302	0160-5384	3	1	CAPACITOR-FXD 2.7PF 400VDC	28480	0160-5384
A1C304	0180-0228	6	2	CAPACITOR-FXD 22UF+-10% 15VDC TA	56289	150D226X9015B2
A1C305	0160-4803	9	1	CAPACITOR-FXD 68PF +-5% 100VDC CER 0+-30	28480	0160-4803
A1C306	0180-0228	6		CAPACITOR-FXD 22UF+-10% 15VDC TA	56289	150D226X9015B2
A1C307	0160-5385	4	1	CAPACITOR-FXD 1.8UF 100VDC	28480	0160-5385
A1C308	0180-2205	3	1	CAPACITOR-FXD .33UF+-10% 35VDC TA	56289	150D334X9035A2
A1C309	0180-0373	2	1	CAPACITOR-FXD .68UF+-10% 35VDC TA	56289	150D684X9035A2
A1C310	0180-0291	3	7	CAPACITOR-FXD 1UF+-10% 35VDC TA	56289	150D105X9035A2
A1C311	0160-4571	8		CAPACITOR-FXD .1UF +80-20% 50VDC CER	28480	0160-4571
A1C312	0160-4571	8		CAPACITOR-FXD .1UF +80-20% 50VDC CER	28480	0160-4571
A1C313	0180-0291	3		CAPACITOR-FXD 1UF+-10% 35VDC TA	56289	150D105X9035A2
A1C314	0160-4571	8		CAPACITOR-FXD .1UF +80-20% 50VDC CER	28480	0160-4571
A1C401	0160-4571	8		CAPACITOR-FXD .1UF +80-20% 50VDC CER	28480	0160-4571
A1C402	0160-4571	8		CAPACITOR-FXD .1UF +80-20% 50VDC CER	28480	0160-4571
A1C404	0160-4571	8		CAPACITOR-FXD .1UF +80-20% 50VDC CER	28480	0160-4571
A1C405	0160-4571	8		CAPACITOR-FXD .1UF +80-20% 50VDC CER	28480	0160-4571
A1C410	0160-5391	2	1	CAPACITOR-FXD 1000PF 100VDC	28480	0160-5391
A1C411	0160-4814	2	1	CAPACITOR-FXD 150PF +-5% 100VDC CER	28480	0160-4814
A1C412	0160-4830	2	1	CAPACITOR-FXD 2200PF +-10% 100VDC CER	28480	0160-4830
A1C430	0160-4823	3	1	CAPACITOR-FXD 820PF +-5% 100VDC CER	28480	0160-4823
A1C431	0160-4831	3	1	CAPACITOR-FXD 4700PF +-10% 100VDC CER	28480	0160-4831
A1C432	0160-4571	8		CAPACITOR-FXD .1UF +80-20% 50VDC CER	28480	0160-4571
A1C433	0160-4571	8		CAPACITOR-FXD .1UF +80-20% 50VDC CER	28480	0160-4571
A1C463	0160-3847	9	7	CAPACITOR-FXD .01UF +100-0% 50VDC CER	28480	0160-3847
A1C464	0160-3847	9		CAPACITOR-FXD .01UF +100-0% 50VDC CER	28480	0160-3847
A1C465	0160-4807	3	4	CAPACITOR-FXD 33PF +-5% 100VDC CER 0+-30	28480	0160-4807
A1C466	0160-4807	3		CAPACITOR-FXD 33PF +-5% 100VDC CER 0+-30	28480	0160-4807
A1C467	0160-4571	8		CAPACITOR-FXD .1UF +80-20% 50VDC CER	28480	0160-4571
A1C468	0160-4571	8		CAPACITOR-FXD .1UF +80-20% 50VDC CER	28480	0160-4571
A1C501	0160-3847	9	7	CAPACITOR-FXD .01UF +100-0% 50VDC	28480	0160-3847
A1C502	0160-3335	0		CAPACITOR-FXD 470PF +-10% 100VDC CER	28480	0160-3335
A1C503	0160-4571	8		CAPACITOR-FXD .1UF +80-20% 50VDC CER	28480	0160-4571
A1C504	0160-3335	0		CAPACITOR-FXD 470PF ±10% 100VDC CER	28480	0160-3335
A1C506	0160-3847	9		CAPACITOR-FXD .01UF +100-0% 50VDC CER	28480	0160-3847
A1C507	0160-3847	9		CAPACITOR-FXD .01UF +100-0% 50VDC CER	28480	0160-3847
A1C508	0160-4571	8		CAPACITOR-FXD .1UF +80-20% 50VDC CER	28480	0160-4571
A1C509	0160-4571	8		CAPACITOR-FXD .1UF +80-20% 50VDC CER	28480	0160-4571
A1C510	0180-0291	3	7	CAPACITOR-FXD 1UF ±10% 35VDC	28480	0180-0291
A1C511	0160-4571	8		CAPACITOR-FXD .1UF +80-20% 50VDC CER	28480	0160-4571
A1C512	0160-4571	8		CAPACITOR-FXD .1UF +80-20% 50VDC CER	28480	0160-4571
A1C514	0160-4807	3		CAPACITOR-FXD 33PF +-5% 100VDC CER 0+-30	28480	0160-4807
A1C515	0160-4807	3		CAPACITOR-FXD 33PF +-5% 100VDC CER 0+-30	28480	0160-4807
A1C518	0160-4571	8		CAPACITOR-FXD .1UF +80-20% 50VDC CER	28480	0160-4571
A1C519	0160-4571	8	2	CAPACITOR-FXD .1UF +80 -20% 50VDC	28480	0160-4571
A1C702	0180-3871	1	2	CAPACITOR-FXD 330UF ±20% 50VDC	28480	0180-3871
A1C703	0180-3871	1		CAPACITOR-FXD 330UF ±20% 50VDC	28480	0180-3871
A1C704	0180-0291	3		CAPACITOR-FXD 1UF +-10% 35VDC TA	56289	150D105X9035A2
A1C705	0180-0291	3		CAPACITOR-FXD 1UF +-10% 35VDC TA	56289	150D105X9035A2
A1C706	0180-0291	3		CAPACITOR-FXD 1UF +-10% 35VDC TA	56289	150D105X9035A2
A1C711	0180-3876	6	1	CAPACITOR-FXD 1000UF ±20% 25VDC	28480	1080-3876
A1C720	0160-4183	8	2	CAPACITOR-FXD 1000PF +-20% 250VAC(RMS)	28480	0160-4183
A1C721	0160-4183	8		CAPACITOR-FXD 1000PF +-20% 250VAC(RMS)	28480	0160-4183
A1C760	0160-4571	8		CAPACITOR-FXD .1UF +80-20% 50VDC CER	28480	0160-4571
A1C761	0180-3879	9	1	CAPACITOR-FXD 3300UF ±20% 25VDC	28480	0180-3879
A1C762	0180-0374	3	1	CAPACITOR-FXD 10UF+-10% 20VDC TA	56289	150D106X9020B2
A1C763	0180-0291	3		CAPACITOR-FXD 1UF+-10% 35VDC TA	56289	150D105X9035A2
A1C764	0160-4571	8		CAPACITOR-FXD .1UF +80-20% 50VDC CER	28480	0160-4571
A1C765	0160-4048	2	2	CAPACITOR .022UF 250V	28480	0160-4048
A1C766	0160-4048	2		CAPACITOR .022UF 250V	28480	0160-4048
A1CR201	1901-0849	8	1	DIODE-PWR RECT 1N4007 1KV 1A DO-41	14936	1N4007
A1CR202	1902-0184	6	1	DIODE-ZNR 16.2V 5% DO-35 PD=.4W	28480	1902-0184
A1CR401	1902-0945	7	4	DIODE-ZNR 3V 5% DO-35 PD=.4W TC=-.043%	28480	1902-0945
A1CR402	1902-0945	7		DIODE-ZNR 3V 5% DO-35 PD=.4W TC=-.043%	28480	1902-0945
A1CR500	1901-0050	3	7	DIODE SWITCHING 80V 200MA 2NS DO-35	28480	1901-0050
A1CR501	1901-0050	3	7	DIODE-SWITCHING 80V 200MA 2NS DO-35	28480	1901-0050

See introduction to this section for ordering information
*Indicates factory selected value

Table 5-3. Replaceable Parts

Reference Designation	HP Part Number	C D	Qty	Description	Mfr Code	Mfr Part Number
A1CR502	1901-0050	3		DIODE-SWITCHING 80V 200MA 2NS DO-35	28480	1901-0050
A1CR503	1901-0050	3		DIODE-SWITCHING 80V 200MA 2NS DO-35	28480	1901-0050
A1CR504	1901-0050	3		DIODE-SWITCHING 80V 200MA 2NS DO-35	28480	1901-0050
A1CR505	1901-0050	3		DIODE-SWITCHING 80V 200MA 2NS DO-35	28480	1901-0050
A1CR507	1902-0945	7		DIODE-ZNR 3V 5% DO-35 PD=.4W TC=-.043%	28480	1902-0945
A1CR508	1902-0945	7		DIODE-ZNR 3V 5% DO-35 PD=.4W TC=-.043%	28480	1902-0945
A1CR701	1901-0743	1	8	DIODE-PWR RECT 1N4004 400V 1A DO-41	01295	1N4004
A1CR702	1901-0743	1		DIODE-PWR RECT 1N4004 400V 1A DO-41	01295	1N4004
A1CR703	1901-0743	1		DIODE-PWR RECT 1N4004 400V 1A DO-41	01295	1N4004
A1CR704	1901-0743	1		DIODE-PWR RECT 1N4004 400V 1A DO-41	01295	1N4004
A1CR705	1901-0743	1		DIODE-PWR RECT 1N4004 400V 1A DO-41	01295	1N4004
A1CR706	1901-0743	1		DIODE-PWR RECT 1N4004 400V 1A DO-41	01295	1N4004
A1CR711	1902-0632	9	2	DIODE-ZNR 1N5354B 17V 5% PD=5W TC=+75%	04713	1N5354B
A1CR712	1902-0936	6	2	DIODE-ZNR 6V PD=5W IR=300UA	12969	TVS505
A1CR713	1902-0632	9		DIODE-ZNR 1N5354B 17V 5% PD=5W TC=+75%	04713	1N5354B
A1CR714	1902-1000	7	2	DIODE-ZNR 1N5366B 39V 5% PD=5W IR=500NA	04713	1N5366B
A1CR715	1902-1000	7		DIODE-ZNR 1N5366B 39V 5% PD=5W IR=500NA	04713	1N5366B
A1CR760	1901-0743	1		DIODE-PWR RECT 1N4004 400V 1A DO-41	01295	1N4004
A1CR761	1901-0743	1		DIODE-PWR RECT 1N4004 400V 1A DO-41	01295	1N4004
A1CR764	1901-0050	3		DIODE-SWITCHING 80V 200MA 2NS DO-35	28480	1901-0050
A1CR766	1902-0936	6		DIODE-ZNR 6V PD=5W IR=300UA	12969	TVS505
A1E101	1970-0100	9	1	SURGE V PROTECTOR	28480	1970-0100
A1F760	2110-0201	0	1	FUSE .25AT250V 1.25X.25 UL (FOR 100V,120V)	28480	2110-0201
A1F760	2110-0318		1	FUSE .125AT 250BV SB 1.25X.25 UL (FOR 220V,240V)	28480	2110-0318
A1XF760	2110-0642	3	1	FUSEHOLDER-BOARD MOUNT	28480	2110-0642
A1FX760	2110-0565	9	1	FUSEHOLDER CAP 12A MAX FOR UL	28480	2110-0565
A1HSK701	1205-0309	9	1	HEAT SINK SGL TO-220-CS	28480	1205-0309
A1HSK702	1205-0355	2	1	HEAT SINK SGL TO-220-CS	28480	1205-0355
A1HSK703	1205-0318	0		HEAT SINK SGL TO-220-CS	28480	1205-0318
A1J504	1200-0583	1	1	SOCKET-IC 24-CONT DIP DIP-SLDR	28480	1200-0583
A1J702	1251-4743	0	1	CONNECTOR-AC PWR HP-9 MALE REC-FLG THRMP	28480	1251-4743
A1JM403	1258-0141	8	4	JUMPER-REM	28480	1258-0141
A1JM501	1258-0141	8		JUMPER-REM	28480	1258-0141
A1JM502	1258-0141	8		JUMPER-REM	28480	1258-0141
A1JM503	1258-0141	8		JUMPER-REM	28480	1258-0141
A1K101	0490-1556	2	1	RELAY-REED 2A 250MA 400VDC 5VDC-COIL	28480	0490-1556
A1K102	0490-1555	1	3	RELAY-REED 2A 250MA 400VDC 5VDC-COIL	28480	0490-1555
A1K103	0490-1555	1		RELAY-REED 2A 250MA 400VDC 5VDC-COIL	28480	0490-1555
A1K104	0490-1555	1		RELAY-REED 2A 250MA 400VDC 5VDC-COIL	28480	0490-1555
A1L201	9100-1666	9	1	INDUCTOR RF-CH-MLD 3.6MH 5%	28480	9100-1666
A1Q201	1853-0510	7	4	TRANSISTOR-2N6520 (SEL)	28480	1853-0510
A1Q202	1853-0510	7		TRANSISTOR-2N6520 (SEL)	28480	1853-0510
A1Q203	1853-0510	7		TRANSISTOR-2N6520 (SEL)	28480	1853-0510
A1Q204	1853-0510	7		TRANSISTOR-2N6520 (SEL)	28480	1853-0510
A1Q205	1855-0298	2	1	TRANSISTOR J-FET N-CHAN D-MODE TO-92	28480	1855-0298
A1R101	0686-5135	6	6	RESISTOR 51K 5% .5W CC TC=0+765	01121	EB5135
A1R102	0686-5135	6		RESISTOR 51K 5% .5W CC TC=0+765	01121	EB5135
A1R103	0686-5135	6		RESISTOR 51K 5% .5W CC TC=0+765	01121	EB5135
A1R104	0686-5135	6		RESISTOR 51K 5% .5W CC TC=0+765	01121	EB5135
A1R105	0686-5135	6		RESISTOR 51K 5% .5W CC TC=0+765	01121	EB5135
A1R106	0686-5135	6		RESISTOR 51K 5% .5W CC TC=0+765	01121	EB5135
A1R107	0811-3435	2	1	RESISTOR .1 .1% 3W PW TC=0+-90	28480	0811-3435
A1R108	0686-1025	5	1	RESISTOR 1K 5% .5W CC TC=0+647	01121	EB1025
A1R109	0683-1655	1	2	RESISTOR 1.6M 5% .25W	28480	0683-1655
A1R110	0698-8777	3	4	RESISTOR 1K 5% .25W	28480	0698-8777
A1R201	0698-8093	6	1	RESISTOR 40K .1% .1W F TC=0+-5	07716	MAR5-1/10-T16-4002-B
A1R202	0757-0472	5	5	RESISTOR 200K 1% .125W	28480	0757-0472
A1R203	0757-0472	5		RESISTOR 200K 1% .125W	28480	0757-0472
A1R204	0683-1035	1	1	RESISTOR 10K 5% .25W FC TC=-400/+700	01121	CB1035
A1R205	0683-4325	8	2	RESISTOR 4.3K 5%.25W	28480	0683-4325
A1R206	0683-4325	8	1	RESISTOR 4.3K 5% .25W FC TC=-400/+700	01121	CB4325
A1R207Δ1	0683-1035	1	2	RESISTOR RESISTOR 10K 5% .25W	28480	0683-1035
A1R302	0698-6670	1	1	RESISTOR 1K .5% .125W F TC=0+-25	28480	0698-6670
A1R303	0698-6520	0	1	RESISTOR 24K .25% .125W F TC=0+-25	28480	0698-6520
A1R304	0683-2435	7	1	RESISTOR 24K 5% .25W FC TC=-400/+800	01121	CB2435
A1R305	0757-0457	6	1	RESISTOR 47.5K 1% .125W F TC=0+-100	24546	C4-1/8-T0-4752-F
A1R306	0683-1005	5	3	RESISTOR 10 5% .25W FC TC=-400/+500	01121	CB1005
A1R307	0683-1005	5		RESISTOR 10 5% .25W FC TC=-400/+500	01121	CB1005
A1R308	0683-3015	1	1	RESISTOR 300 5% .25W FC TC=-400/+600	01121	CB3015
A1R401	0683-1655	1	1	RESISTOR 1.6M 5% .25W FC TC=-900/+1100	01121	CB1655
A1R402	0698-8353	1	1	RESISTOR 806K 1% .125W F TC=0+-100	28480	0698-8353

See introduction to this section for ordering information
*Indicates factory selected value

Replaceable Parts

Table 5-3. Replaceable Parts

Reference Designation	HP Part Number	C D	Qty	Description	Mfr Code	Mfr Part Number
A1R403	0698-4539	7	1	RESISTOR 402K 1% .125W F TC=0+-100	28480	0698-4539
A1R404	0757-0472	5	1	RESISTOR 200K 1% .125W F TC=0+-100	24546	C4-1/8-T0-2003-F
A1R405	0757-0465	6	1	RESISTOR 100K 1% .125W F TC=0+-100	24546	C4-1/8-T0-1003-F
A1R406	0698-3228	9	1	RESISTOR 49.9K 1% .125W F TC=0+-100	28480	0698-3228
A1R407	0683-8255	1	1	RESISTOR 8.2M 5% .25W FC TC=-900/+1100	01121	CB8255
A1R408	0683-1005	5		RESISTOR 10 5% .25W FC TC=-400/+500	01121	CB1005
A1R409	0757-0415	6	1	RESISTOR 475 1% .125W F TC=0+-100	24546	C4-1/8-T0-475R-F
A1R460	0683-1525	4	6	RESISTOR 1.5K5% .25W FC TC=-400/+700	01121	CB1525
A1R461	0683-1525	4		RESISTOR 1.5K5% .25W FC TC=-400/+700	01121	CB1525
A1R462	0683-4335	0	4	RESISTOR 43K 5% .25W FC TC=-400/+800	01121	CB4335
A1R463	0683-4715	0		RESISTOR 470 5% .25W FC TC=-400/+600	01121	CB4715
A1R464	0683-4715	0		RESISTOR 470 5% .25W FC TC=-400/+600	01121	CB4715
A1R465	0683-4335	0		RESISTOR 43K 5% .25W FC TC=-400/+800	01121	CB4335
A1R466	0683-5125	8	11	RESISTOR 5.1K 5% .25W FC TC=-400/+700	01121	CB5125
A1R467	0683-5125	8		RESISTOR 5.1K 5% .25W FC TC=-400/+700	01121	CB5125
A1R468	0757-0283	6	1	RESISTOR 2K 1% .125W	28480	0757-0283
A1R469	0757-0472	5	5	RESISTOR 200K 1% .125W	28480	0757-0472
A1R470	0683-5125	8		RESISTOR 5.1K 5% .25W FC TC=-400/+700	01121	CB5125
A1R471	0698-8777	3		RESISTOR 1K 5% .25W	28480	0698-8777
A1R501	0757-0472	5		RESISTOR 200K 1% .125W	28480	0757-0472
A1R503	1810-0560	7	1	RESISTIVE NETWORK- 8 X 5.6K OHM	28480	1810-0560
A1R504	0698-3359	7	1	RESISTOR 12.7K 1% .125W F TC=0+-100	24546	C4-1/8-T0-1272-F
A1R506	0698-8777	3		RESISTOR 1K 5% .25W	28480	0698-8777
A1R509	1810-0126	1	2	NETWORK-RES 14-DIP10.0K OHM X 13	11236	760-1-R10K
A1R510	1810-0126	1		NETWORK-RES 14-DIP10.0K OHM X 13	11236	760-1-R10K
A1R517	0683-1525	4		RESISTOR 1.5K5% .25W FC TC=-400/+700	01121	CB1525
A1R518	0683-1525	4		RESISTOR 1.5K5% .25W FC TC=-400/+700	01121	CB1525
A1R519	0683-4715	0		RESISTOR 470 5% .25W FC TC=-400/+600	01121	CB4715
A1R520	0683-4715	0		RESISTOR 470 5% .25W FC TC=-400/+600	01121	CB4715
A1R521	0683-4335	0		RESISTOR 43K 5% .25W FC TC=-400/+800	01121	CB4335
A1R522	0683-4335	0		RESISTOR 43K 5% .25W FC TC=-400/+800	01121	CB4335
A1R523	0683-5125	8		RESISTOR 5.1K 5% .25W FC TC=-400/+700	01121	CB5125
A1R524	0683-5125	8		RESISTOR 5.1K 5% .25W FC TC=-400/+700	01121	CB5125
A1R528	0683-5125	8		RESISTOR 5.1K 5% .25W FC TC=-400/+700	01121	CB5125
A1R529	0683-5125	8		RESISTOR 5.1K 5% .25W FC TC=-400/+700	01121	CB5125
A1R531	0683-5125	8		RESISTOR 5.1K 5% .25W FC TC=-400/+700	01121	CB5125
A1R532	0683-5125	8		RESISTOR 5.1K 5% .25W FC TC=-400/+700	01121	CB5125
A1R534	0686-1015	3	2	RESISTOR 100 5% .5W CC TC=0+529	01121	EB1015
A1R538	0686-1015	3		RESISTOR 100 5% .5W CC TC=0+529	01121	EB1015
A1R539	0683-5125	8		RESISTOR 5.1K 5% .25W FC TC=-400/+700	01121	CB5125
A1R540	0683-5125	8		RESISTOR 5.1K 5% .25W FC TC=-400/+700	01121	CB5125
A1R553	0698-8777	3		RESISTOR 1K 5% .25W	28480	0698-8777
A1R554	0698-8768	2		RESISTOR 100 5% .25W	28480	0698-8768
A1R555	0698-8767	1		RESISTOR 200K 5% .25W	28480	0698-8767
A1R761	0698-4482	9	1	RESISTOR 17.4K 1% .125W F TC=0+-100	03888	PME55-1/8-T0-1742-F
A1R762	0698-3226	7	2	RESISTOR 6.49K 1% .125W F TC=0+-100	24546	C4-1/8-T0-6491-F
A1R763	0698-3226	7		RESISTOR 6.49K 1% .125W F TC=0+-100	24546	C4-1/8-T0-6491-F
A1R765	0683-4715	0		RESISTOR 470 5% .25W FC TC=-400/+600	01121	CB4715
A1R766	0698-8768	2	3	RESISTOR 100 5% .25W	28480	0698-8768
A1R767	0698-8768	2		RESISTOR 100 5% .25W	28480	0698-8768
A1R768	0683-1035	1		RESISTOR 10K 5% .25W	28480	0683-1035
A1R769	0698-3444	1		RESISTOR 316 OHM 1% .125W	28480	0698-3444
A1RP527	1810-0307	0	1	NETWORK-CNDCT MODULE DIP; 16 PINS; 0.100	28480	1810-0307
A1RT507	0837-0223	4		THERMISTOR-PTC 10.30	28480	0837-0223
A1S501	3101-2243	6	1	SWITCH-RKR DIP-RKR-ASSY 8-1A .05A 30VDC	28480	3101-2243
A1T401	9100-2616	1	2	TRANSFORMER-PULSE BIFILAR WOUND; 18.0 MM	28480	9100-2616
A1T501	9100-2616	1		TRANSFORMER-PULSE BIFILAR WOUND; 18.0 MM	28480	9100-2616
A1T760	9100-4201	4	1	TRANSFORMER-POWER	28480	9100-4201
A1TP403	1251-5835	3	1	CONNECTOR 6-PIN M POST TYPE	28480	1251-5835
A1TP501	1251-4682	6	1	CONNECTOR 3-PIN M POST TYPE	28480	1251-4682
A1TP502	1251-4367	4	1	CONNECTOR 8-PIN M POST TYPE	28480	1251-4367
A1TP503	1251-5394	9	1	CONNECTOR 4-PIN M POST TYPE	28480	1251-5394
A1U101	1826-1056	1	1	IC OP AMP PRCN TO-99 PKG	28480	1826-1056
A1U102	1QF7-0067	6	1	PCB HYBRID INPUT	28480	1QF7-0067
A1U201	1826-0493	8	2	IC OP AMP LOW-BIAS-H-IMPD 8-DIP-P PKG	04713	MLM308AP1
A1U202	1826-0493	8		IC OP AMP LOW-BIAS-H-IMPD 8-DIP-P PKG	04713	MLM308AP1
A1U203	1826-0072	9	1	IC LIN LM208H	28480	1826-0072
A1U301	1826-0887	4	1	IC-LF412CN(SEL)	28480	1826-0887
A1U302	1826-1010	7	1	IC LINEAR	28480	1826-1010
A1U303	1826-0893	2	1	IC-CONV, AD536	28480	1826-0893
A1U401	1826-0311	9	1	IC 201A	28480	1826-0311
A1U402	1826-0635	0	2	IC OP-07CP	28480	1826-0635
A1U403	1QF6-0066	3	1	PCB HYBRID A/D	28480	1QF6-0066
A1U404	1826-0271	0	1	IC OP AMP GP 8-DIP-P PKG	01295	SN72741P
A1U405	1826-0635	0	1	IC OP AMP LOW-OFS 8-DIP-P PKG	06665	OP-07CP
A1U461	1826-1249	4	1	IC LINEAR RGLTR-V-REF-FXD 6.8/7.1V	28480	1826-1249
A1U462	1820-2726	2	1	IC-MICROPROCESSOR	28480	1820-2726

See introduction to this section for ordering information
*Indicates factory selected value

Table 5-3. Replaceable Parts

Reference Designation	HP Part Number	C D	Qty	Description	Mfr Code	Mfr Part Number
A1U465	1820-2258	5	1	IC FF CMOS D-TYPE POS-EDGE-TRIG COM	04713	MC14174BCP
A1U466	1820-0935	1	1	IC CNTR CMOS BIN NEG-EDGE-TRIG 14-BIT	0192B	CD4020BE
A1U467	1820-1144	6	2	IC GATE TTL LS NOR QUAD 2-INP	01295	SN74LS02N
A1U468	1826-0138	8	2	IC COMPARATOR GP QUAD 14-DIP-P PKG	01295	LM339N
A1U501	1820-2718	2	1	IC-INS 8039LN-11	28480	1820-2718
A1U502	03478-65501	0	1	ROM 64K	28480	03478-65501
A1U503	1820-2549	7	1	IC-8291A P HPIB	28480	1820-2549
A1U504	1820-2485	0	1	IC RCVR TTL LS BUS OCTL	01295	SN75160N
A1U505	1820-2483	8	1	IC RCVR TTL LS BUS OCTL	01295	SN75161N
A1U506	1820-1578	0	1	IC SHF-RGTR CMOS D-TYPE PRL-IN PRL-OUT	0192B	CD4076BE
A1U507	1820-2702	4	1	IC NMOS 16384-BIT COUNTER	28480	1820-2702
A1U508	1820-1199	1	1	IC INV TTL LS HEX 1-INP	01295	SN74LS04N
A1U510	1820-1794	2	1	IC BFR TTL LS NON-INV OCTL	27014	DM81LS95N
A1U512	1818-1754	9	1	IC-RAM MOS 5101L	28480	1818-1754
A1U513	1820-2102	8	1	IC LCH TTL LS D-TYPE OCTL	01295	SN74LS373N
A1U514	1820-1212	9	1	IC FF TTL LS J-K NEG-EDGE-TRIG	01295	SN74LS112AN
A1U515	1820-3080	3	1	IC 74HC20N	28480	1820-3080
A1U550	1826-0138	8		IC COMPARATOR GP QUAD 14-DIP-P PKG	01295	LM339N
A1U701	1826-0551	9	1	IC 340LA V RGLTR TO-92	27014	LM340LAZ-5
A1U702	1826-0214	1	1	IC V RGLTR TO-220	04713	MC7915CT
A1U703	1826-0396	0	1	IC 7815 V RGLTR TO-220	07263	7815UC
A1W501	8120-3479	7	1	CABLE-RIBBON 16P M/M	28480	8120-3479
A1X527	1200-0853	8	1	SOCKET-IC 16-CONT DIP DIP-SLDR	28480	1200-0853
A1Y460	0410-1331	3	1	CRYSTAL-10.980 MHZ	28480	0410-1331
A1Y501	0410-1330	2	1	CRYSTAL-5.856 MHZ	28480	0410-1330

See introduction to this section for ordering information
*Indicates factory selected value

Table 5-3. Replaceable Parts

Reference Designation	HP Part Number	C D	Qty	Description	Mfr Code	Mfr Part Number
				A1 MISCELLANEOUS PARTS		
C406	0160-0576	5	1	CAPACITOR-FXD .1UF 50V	28480	0160-0576
MP501	1600-0273	4		SHIELD-RF	28480	1600-0273
				CHASSIS MOUNTED PARTS		
C764	0160-4571	8		CAPACITOR-FXD .1UF +80-20% 50VDC CER	28480	0160-4571
S760	03478-61905	0	1	SWITCH ASSEMBLY, POWER	28480	03478-61905
U760	1826-0551	9	1	IC LM340AT-5	28480	1826-0551
				MISCELLANEOUS PARTS		
F101	2110-0003	0	1	FUSE 3A 250V NTD 1.25X.25 UL	75915	312003
S1	03478-61902	7	1	FRONT/REAR SWITCH ASSY	28480	03478-61902
W502	8120-3280	8	1	CABLE ASSY- 28 PVCRBN	28480	8120-3280
MP202	03478-60202	8	1	FRONT PANEL ASSEMBLY	28480	03478-60202
DSP1	5061-1166	6	1	DISPLAY ASSY	28480	5061-1166
FC101	5061-1163	3	1	JACK ASSY-FUSED	28480	5061-1163

See introduction to this section for ordering information
*Indicates factory selected value

Table 5-4. 3478A Mechanical and Miscellaneous Parts

Ref. Des.	Part Number	CD	Qty.	Description
C764	0160-3622	8	1	.1μF (Included with W3 Assembly)
CVR1	03478-04111	0	1	Cover
CVR3	5001-0438	7	2	Trim Strip
DSP1	5061-1166	6	1	Display Assembly
FC101	5061-1163	3	1	Jack Assembly-Fused
FRM1	03478-00111	2	1	Chassis Assembly
HDW1	0380-0072	2	2	Spacer (Power Switch Mounting)
HDW2	0535-0007	2	2	Nut (HP-IB Connector)
HDW3	2190-0004	9	2	Lock Washer (Power Switch Mounting)
HDW4	2190-0577	1	2	Lock Washer (HP-IB Connector)
HDW5	2950-0043	8	2	Nuts (for BNC Connectors)
HDW8	2190-0918	4	3	Lock Washer
HDW9	2190-0016	3	2	Lock Washers (for BNC Connectors)
HSK701	1205-0309	9	1	Heatsink
HSK702	1205-0355	5	1	Heatsink
HSK703	1205-0318	0	1	Heatsink
KYC1	0370-0603	4	2	Pushbutton
LBL35	7120-4835	0	1	Label, CSA Usage (not shown)
LBL83	7124-2083	4	1	Label, Information (not shown)
MP2	1250-0083	1	2	BNC Connectors
MP3	1510-0124	3	4	Bushing (for Binding Post)
MP6	4320-0370	1	1	Elastomer
MP7	5040-7201	8	4	Foot
MP12	1460-1345	5	2	Tilt Stand
MP13	5061-1164	4	4	Binding Post
MP15	03478-88301	6	1	Front Bezel
MP16	03478-88302	7	1	Rear Bezel
MP26	1400-1122	0	2	Cable Clamp
MP30	4135-0415	2	1	Push Rod (Power Switch)
MP202	03478-60202	8	1	Front Panel Assembly
MP505	4135-0416	3	1	Push Rod (Front/Rear Switch)
SCW2	0515-0367	5	2	Screw, Power Switch Mounting
SCW3	0515-0368	6	2	Screw, Motherboard to Front Panel
SCW4	0515-0430	3	7	Screw
SCW5	0515-0431	4	2	Screw, Bottom Cover
SCW6	0515-0458	5	2	Screw (attaches display to front panel)
STD3	0380-1289	5	2	Stud (HP-IB Connector fastener)
U760	1826-0551	9	1	Regulator IC LM340AT-5
W3	03478-61601	3	1	Regulator Cable Assembly
W501	8120-3479	7	1	Display Cable Assembly
W502	8120-3280	8	1	HP-IB Cable Assembly

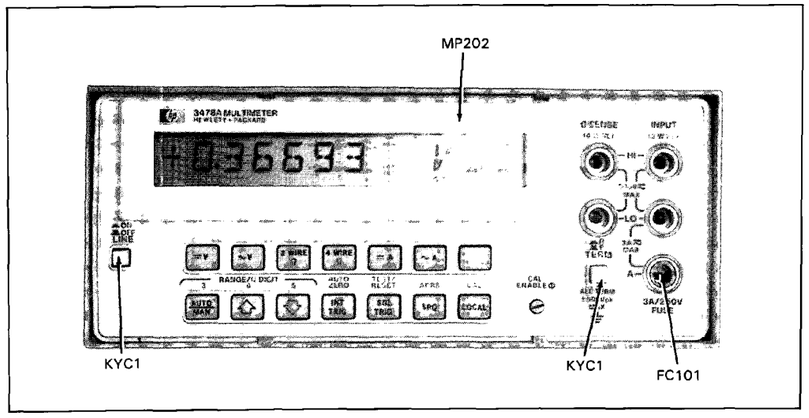

Figure 5-1. 3478A Front Panel View

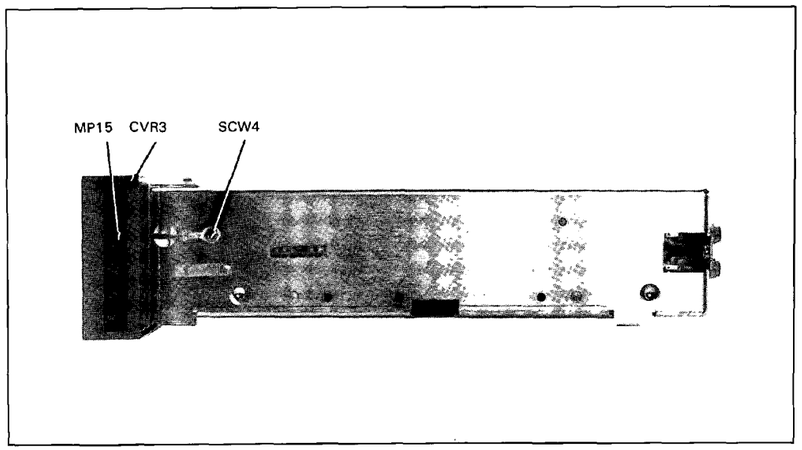

Figure 5-2. 3478A Left Side View

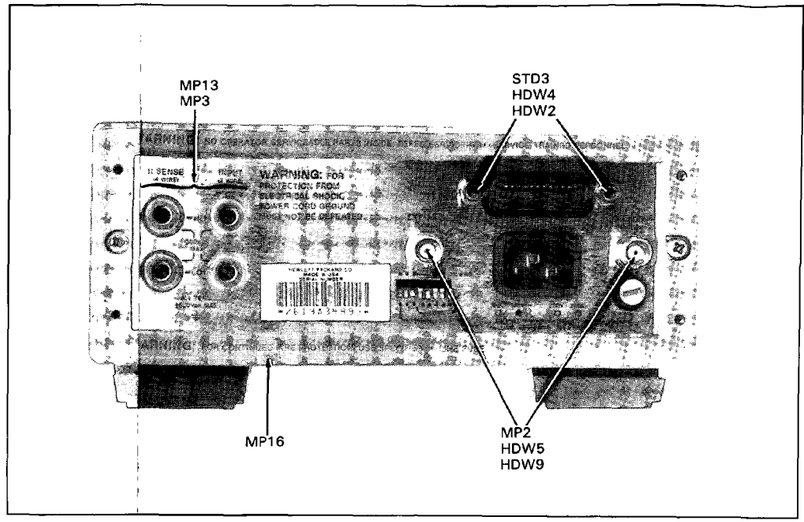

Figure 5-3. Rear Panel View

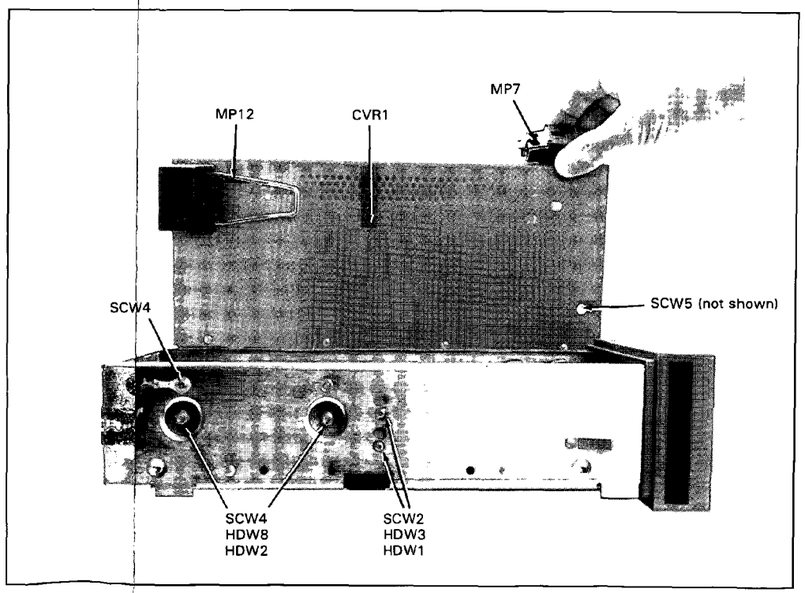

Figure 5-4. Right Side View

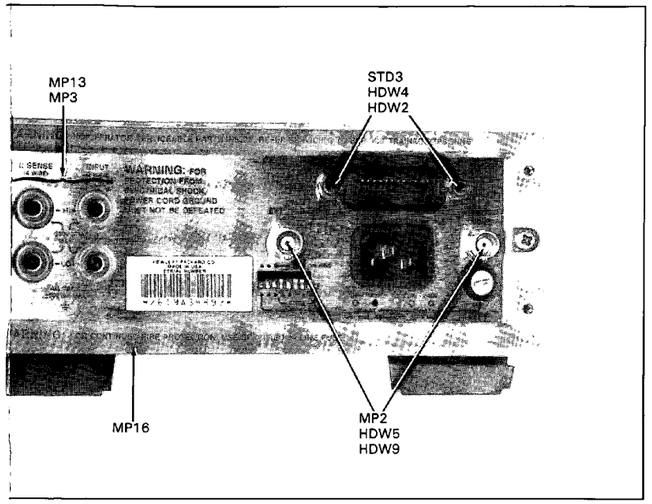

Figure 5-3. Rear Panel View

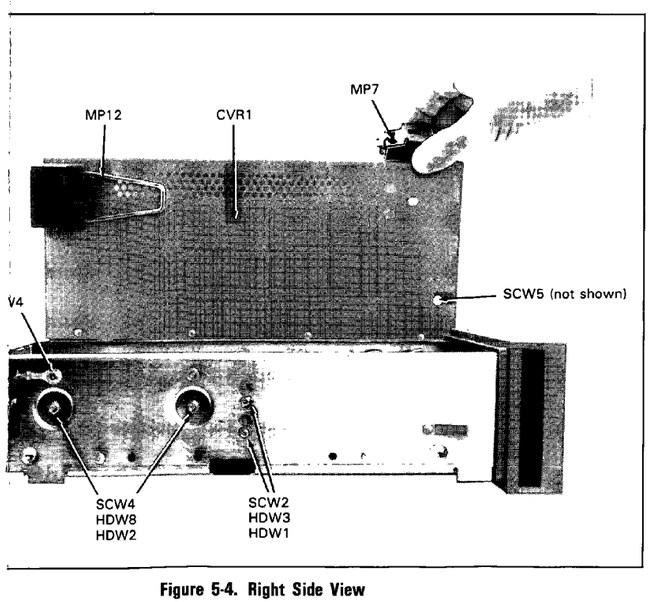

Figure 5-4. Right Side View

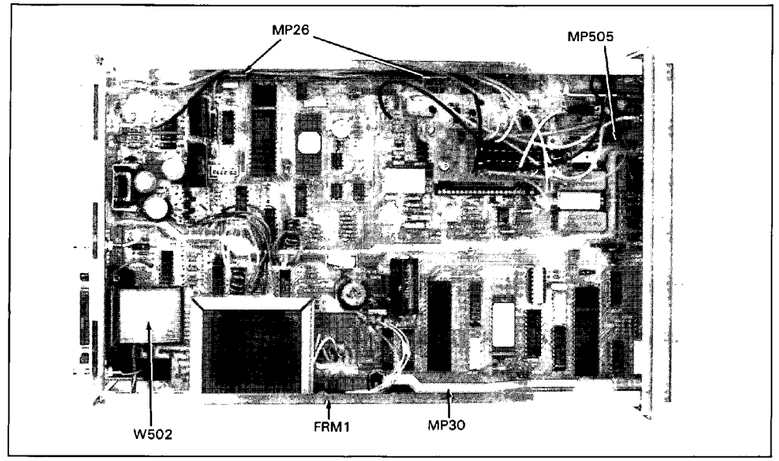

Figure 5-5. Top View With Cover Removed

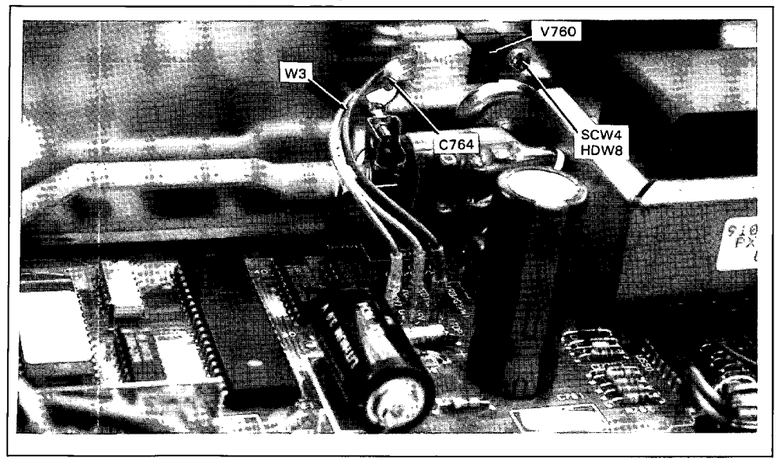

Figure 5-6. Regulator Detail View

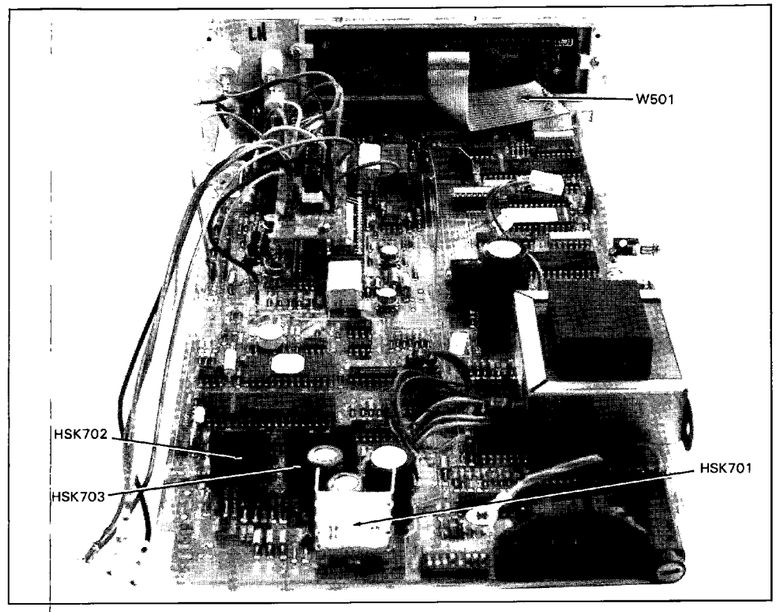

Figure 5-7. Motherboard and Front Panel Assembly

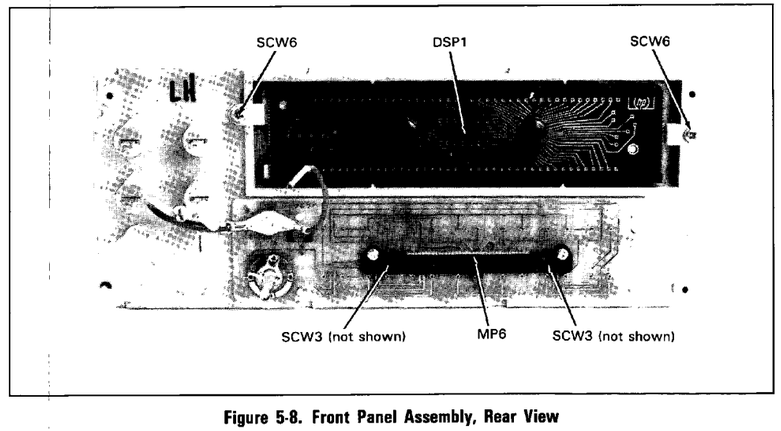

Figure 5-8. Front Panel Assembly, Rear View

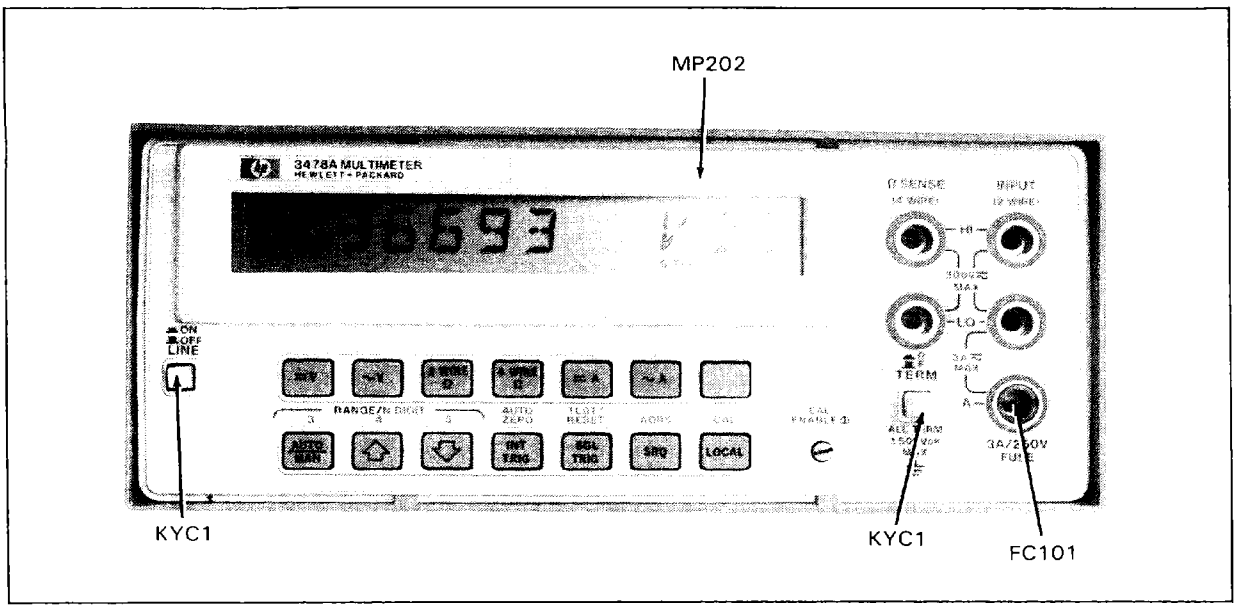

Figure 5-1. 3478A Front Panel View

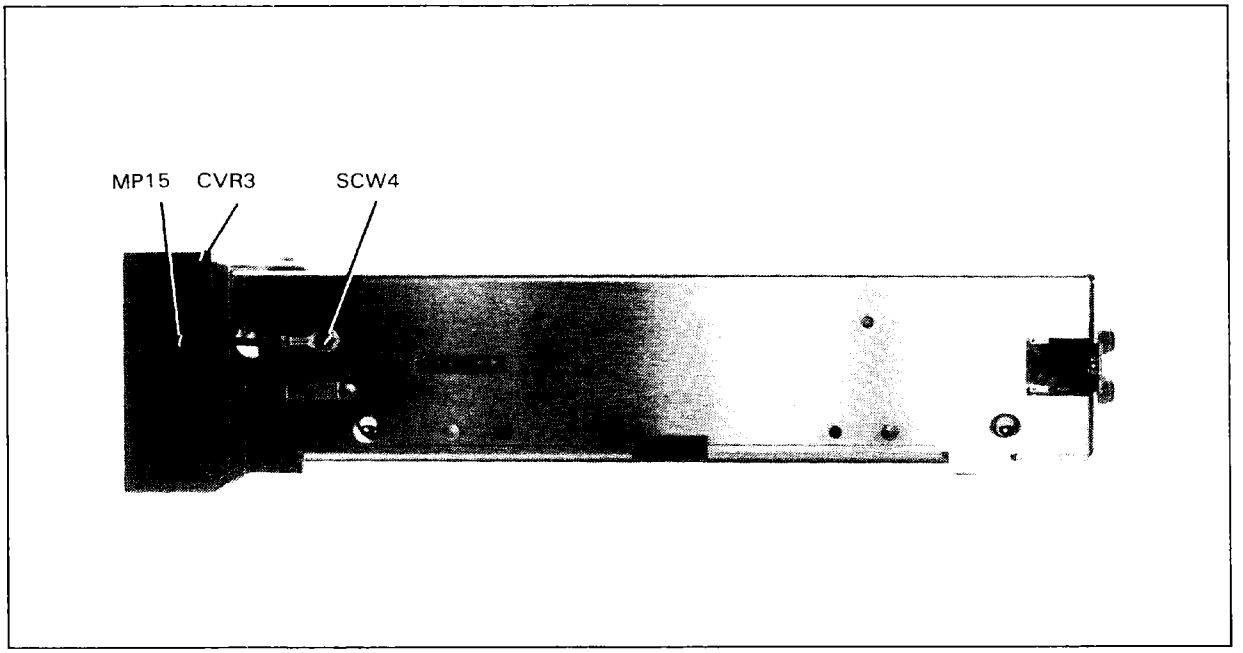

Figure 5-2. 3478A Left Side View

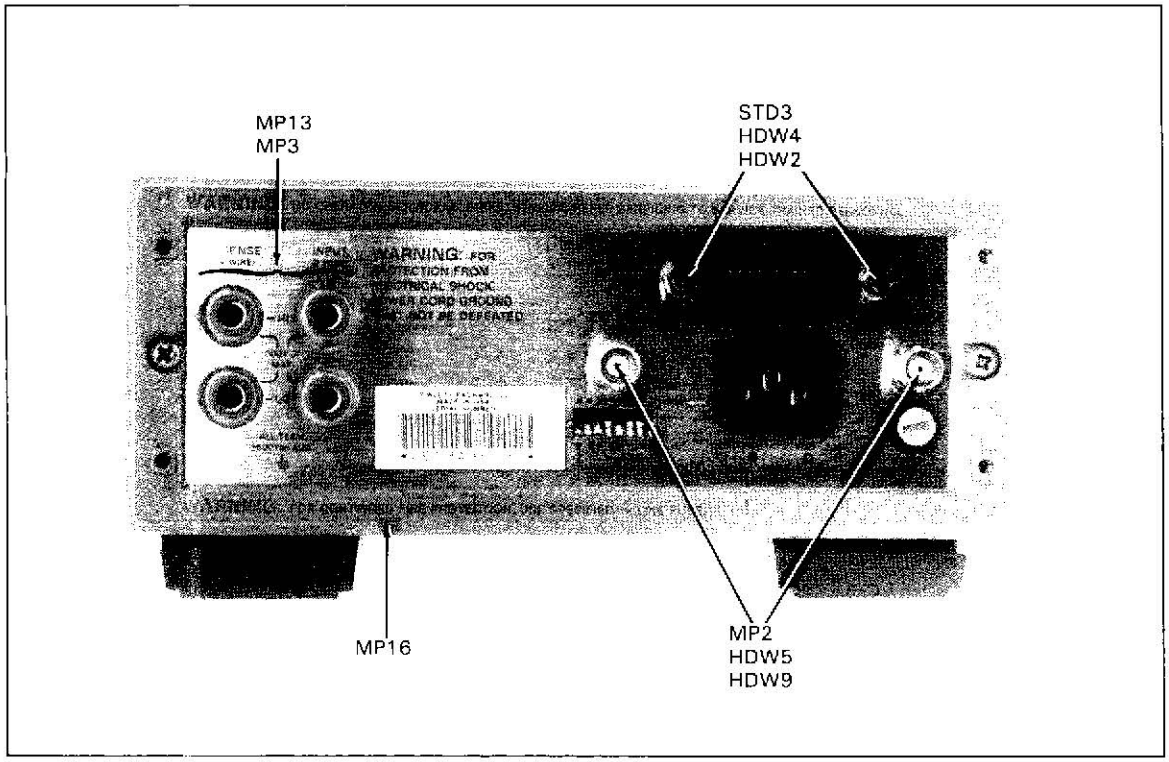

Figure 5-3. Rear Panel View

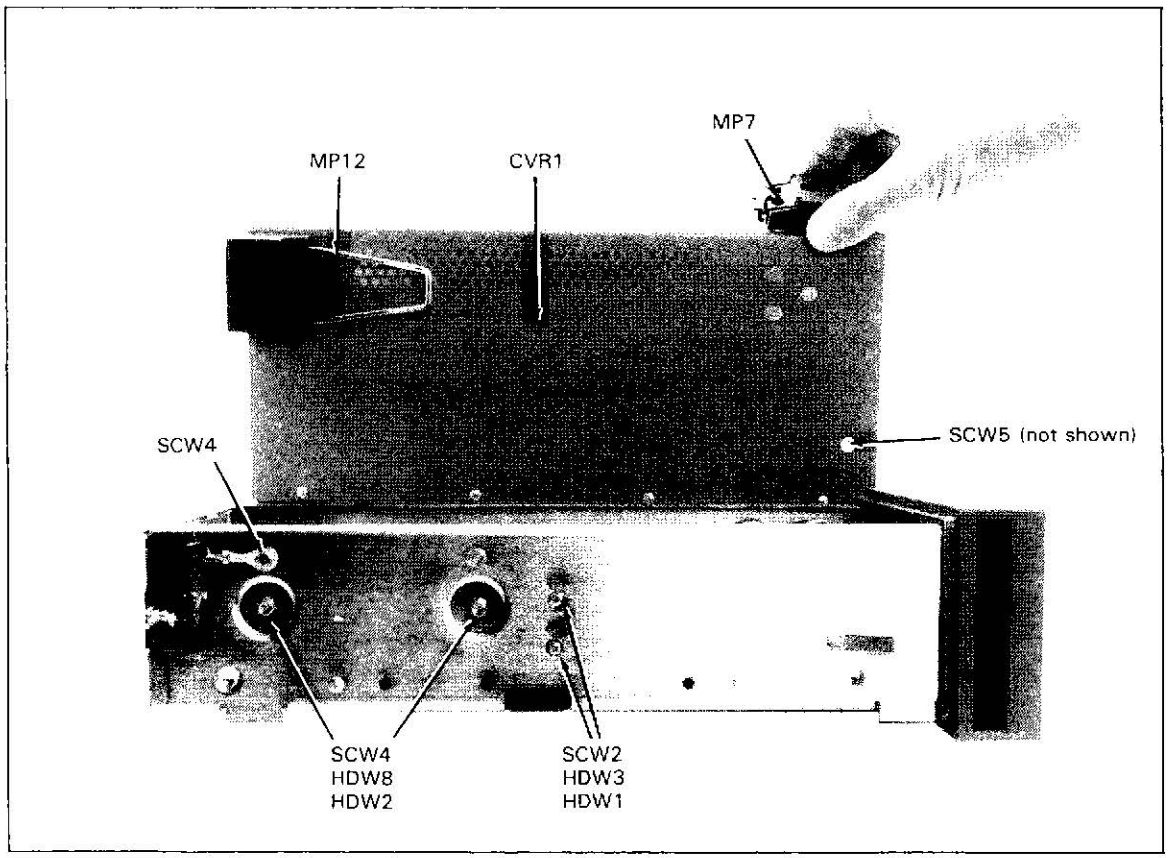

Figure 5-4. Right Side View

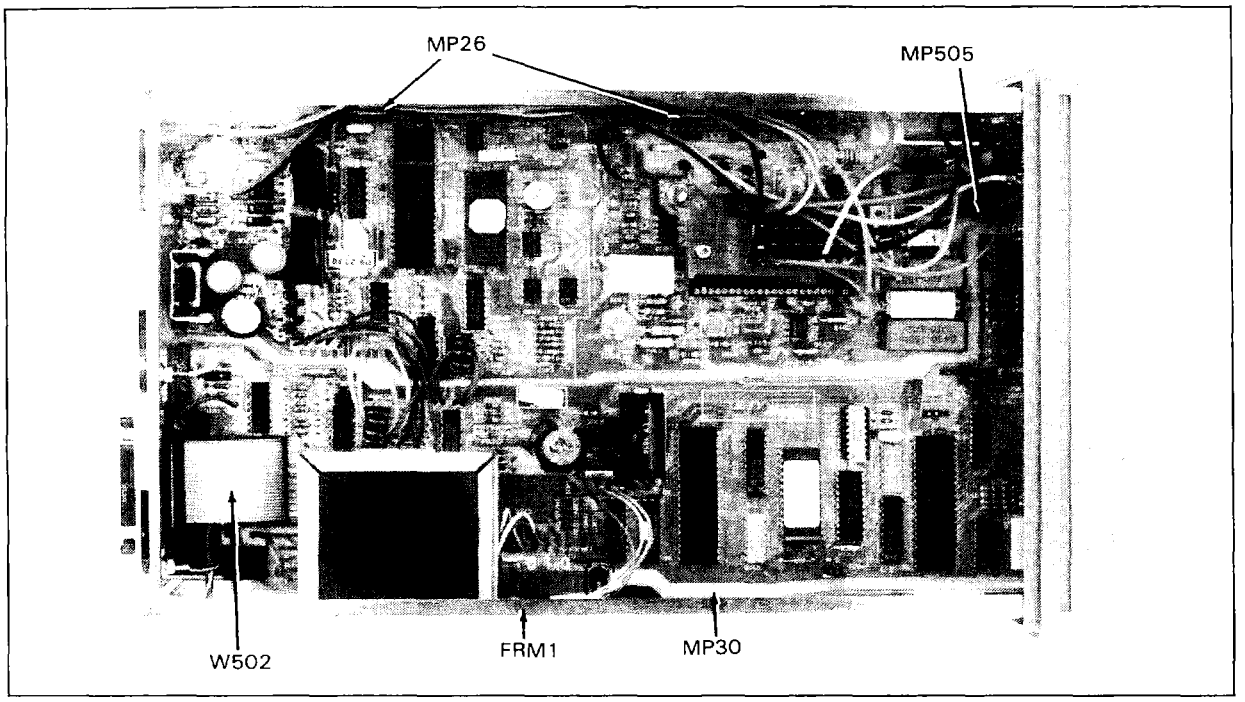

Figure 5-5. Top View With Cover Removed

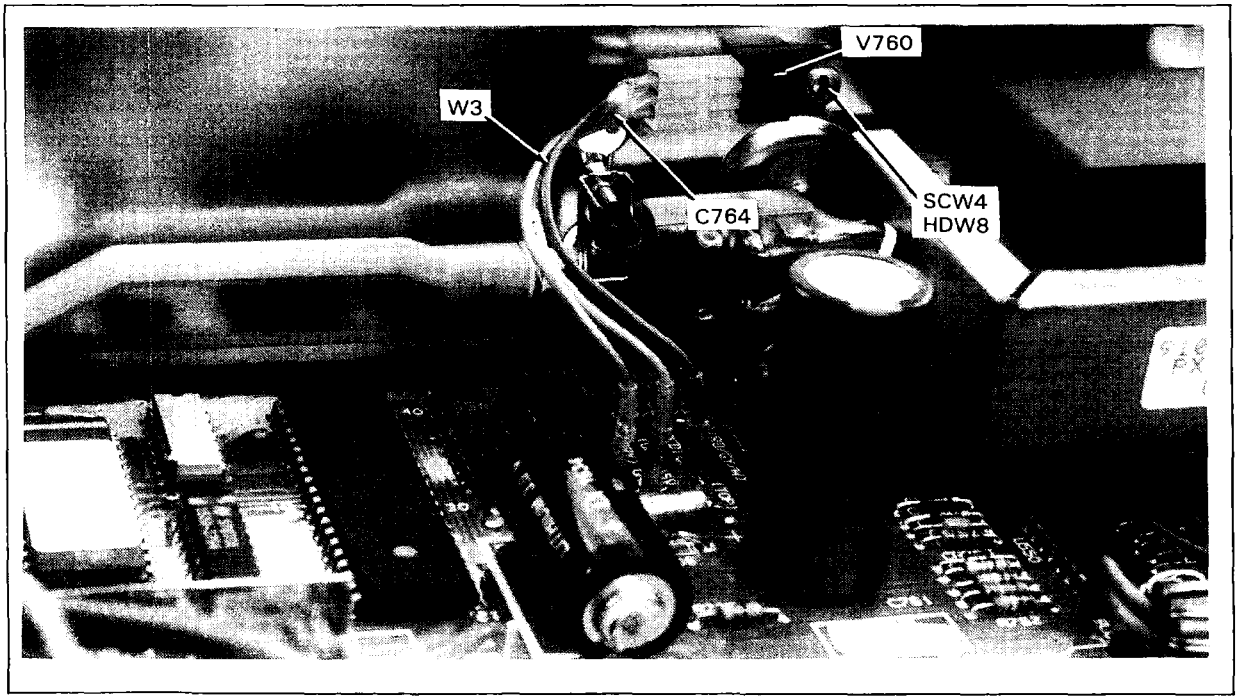

Figure 5-6. Regulator Detail View

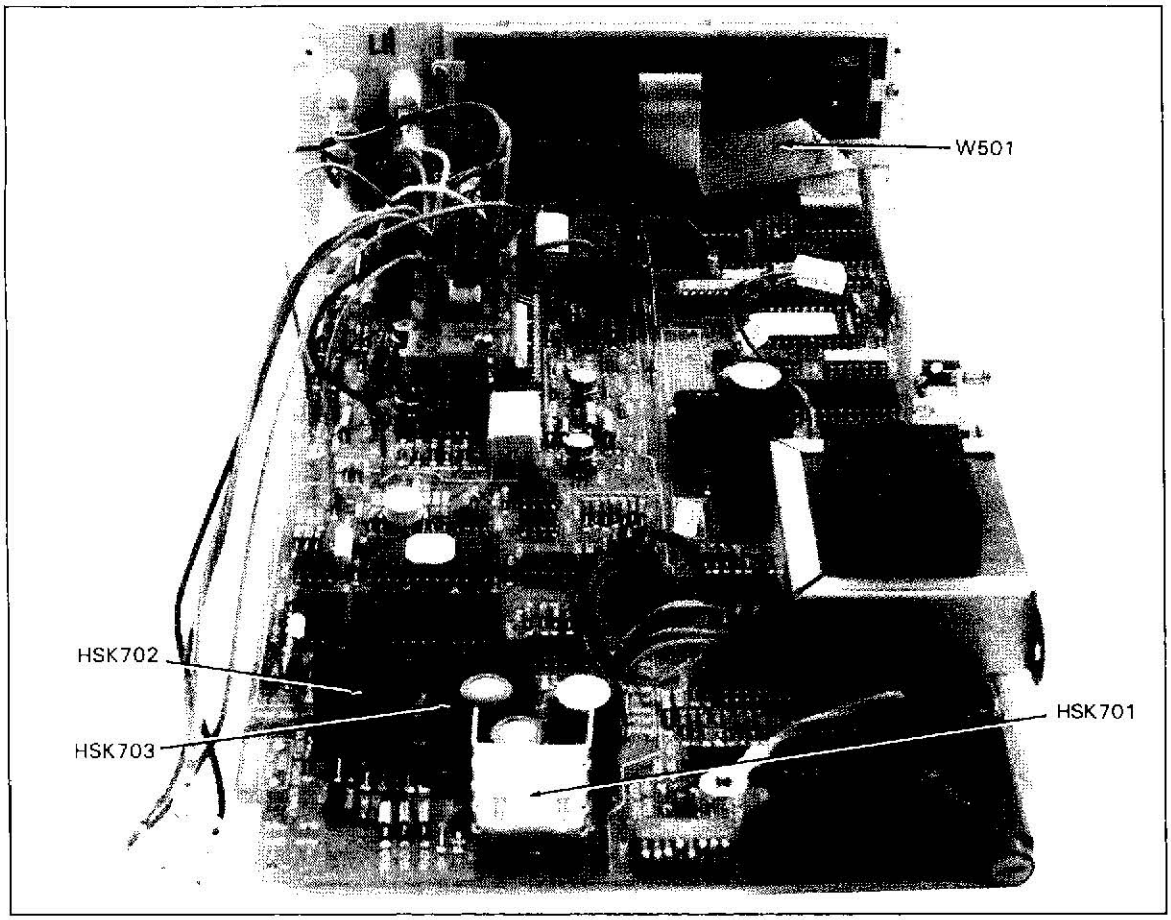

Figure 5-7. Motherboard and Front Panel Assembly

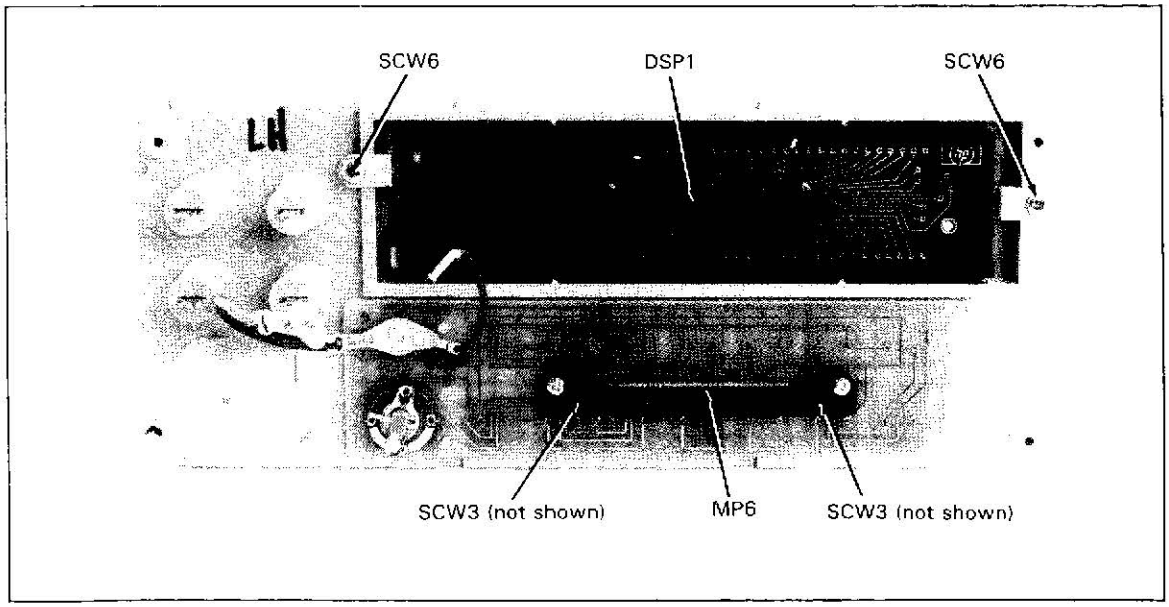

Figure 5-8. Front Panel Assembly, Rear View

SECTION VI
BACKDATING

6-1. INTRODUCTION

6-2. This section contains information used to adapt this manual to instruments with serial number prefixes lower than that listed on the title page. Parts listed in this section are recommended for direct replacement in the instruments affected. Parts not specifically listed in this section should be replaced with the part presently shown in Table 5-3 and on the schematics.

6-3. The following serial numbers and lower are affected by backdating information:

Serial Number	Information Begins
2136A03480	Paragraph 6-4
2301A08635	Paragraph 6-7
2301A18860	Paragraph 6-8
2520A19795	Paragraph 6-9
2520A20970	Paragraph 6-10
2520A22585	Paragraph 6-11
2545A24740	Paragraph 6-15
2545A26015	Paragraph 6-16
2619A26305	Paragraph 6-20
2619A32988	Paragraph 6-22
2619A37719	Paragraph 6-26
2619A37794	Paragraph 6-27

6-4. 2136A03480 & below. Instruments with this serial number and below use a Revision B 03478-66501 printed circuit board. Figure 6-1 shows the component locator for the Revision B boards. Figure 6-2 shows schematic 4 of the Revision B boards.

6-5. Other changes are as follows: Schematic 1 Figure 6-4, delete R207. Schematic 3 Figure 6-5, delete CR500 and change the power supply connection for U512 (pin 22) from CR764 to Q701.

6-6. Material list changes for the revision B printed circuit boards are shown in Table 6-1.

Table 6-1. Changes to Table 5-3 (Revision B Boards)

Ref. Desig.	-hp- Part Number	C D	Changes
A1C765	0160-4048	4	DELETE FROM TABLE
A1C766	0160-4048	4	DELETE FROM TABLE
A1CR500	1901-0518	8	DELETE FROM TABLE
A1R207	0683-1035	1	DELETE FROM TABLE
A1R766	0698-8768	2	DELETE FROM TABLE
A1R767	0698-8768	2	DELETE FROM TABLE
A1R768	0683-1035	1	DELETE FROM TABLE
A1CR762	1901-0050	3	ADD DIODE
A1Q701	1854-0071	7	ADD TRANSISTOR NPN
A1R760	0683-2025	1	ADD 2K 5% RESISTOR
A1R764	0683-4705	8	ADD 47 5% RESISTOR

6-7. 2301A08635 & below. Instruments with this serial number and below have a different side frame and plastic shield. Table 6-9 and Figures 6-6 through 6-13 show the mechanical breakdown of these instruments. For replacement purposes, substitute the parts listed in Table 6-2 for the parts in Table 6-9.

Table 6-2. Changes to Table 6-9

Ref. Des.	Part Number	C D	Qty.	Description
MP14	03478-61201	9	2	Side Frame
MP23	03478-00603	7	1	Plastic Shield

6-8. 2301A18860 & below. Instruments with this serial number and below use INCH rack mounting hardware. The METRIC hardware used in higher serial numbers is not compatible. Table 6-9 and Figures 6-6 through 6-13 show the mechanical breakdown of these instruments. For replacement purposes, substitute the parts listed in Table 6-3 for the parts in Table 6-9.

Table 6-3. Changes to Table 6-9

Ref. Des.	Part Number	C D	Qty.	Description
MP4	5060-9905	5	2	Side Cover
MP6	5060-9829	2	1	Top Cover
MP10	5060-9841	8	1	Bottom Cover
MP13	5020-8813	8	1	Front Frame
MP14	03478-61203	4	2	Side Frame
MP15	2510-0192	6	5	Screw (Side Frame)
MP18	5020-8814	9	1	Rear Frame

6-9. 2520A19795 & below. Instruments with this serial number and below used a capacitor and voltage suppresser in the input circuit. A different voltage suppresser and a surge protector were added and the capacitor deleted for later instruments. Figure 6-4 shows the schematic that applies to these serial numbers. For replacement purposes, substitute the parts listed in Table 6-4 for the parts in Table 5-3.

Table 6-4. Changes to Table 5-3

Ref. Des.	Part Number	C D	Qty.	Description
C104	0150-0012	3	1	CAPACITOR-FXD .01uF 1KV
E101	1970-0090	6	1	Tube ELCTRN 630V

6-10. **2520A**20970 & below. The value of R469 was changed from 200K to 1.6M in later instruments. For replacement purposes use the higher value part listed in table 5-3.

6-11. **2520A**22585 & below. The voltage reference, U461, was changed in later instruments. The new reference allowed the 3478A to meet better specifications for DC and AC voltage measurements. Instruments with this serial number and below will not meet the new specifications.

6-12. Make the following changes to the specifications in Table 1-1.

Table 6-5. Changes to Table 1-1

DC Volts Measurement Accuracy

5½ Digit Mode:

Range	Cal. Temp ± 1°C 24 Hours	Cal. Temp. ±5°C 90 Day	1 Year
30mV	0.027 + 35	0.030 + 41	0.040 + 41
300mV	0.005 + 4	0.007 + 5	0.020 + 5
3 V	0.0034 + 2	0.006 + 2	0.019 + 2
30 V	0.005 + 3	0.007 + 2	0.020 + 3
300 V	0.0055 + 2	0.008 + 2	0.020 + 2

AC Volts Measurement Accuracy

Frequency	300mV	Ranges 3V, 30V	300V
20Hz-50Hz	1.14 + 163	1.14 + 102	1.18 + 102
50Hz – 100Hz	0.46 + 163	0.46 + 103	0.50 + 102
100Hz – 20kHz	0.29 + 163	0.26 + 102	0.33 + 102
20kHz – 50kHz	0.56 + 247	0.41 + 180	0.55 + 180
50kHz – 100kHz	1.74 + 882	1.05 + 825	1.26 + 825
100kHz – 300kHz		10.1 + 3720 (30V range only)	

6-13. Performance Test Cards for the older instruments are provided at the end of this section. Use these Performance Test Cards when calibrating or performance testing the 3478A. The Performance Test procedure and calibration procedure given in Section IV of this manual still applies. The Performance Test Cards can be reproduced without written permission from Hewlett-Packard.

6-14. Make the following changes to the tables indicated in Section IV.

Table 6-6. Changes to Table 4-1 (Abbreviated Specifications Table)

DC Volts Function (accuracy = ±(% of reading + number of counts))

Range	24 Hour	90 Day	1 Year
30mV	0.027 + 35	0.030 + 41	0.040 + 41
300mV	0.005 + 4	0.007 + 5	0.020 + 5
3V	0.0034 + 2	0.006 + 2	0.019 + 2
30V	0.005 + 3	0.007 + 2	0.020 + 3
300V	0.0055 + 2	0.008 + 2	0.020 + 2

DC Current Function (accuracy = ±(% of reading + number of counts))

Range	90 Day	1 Year
300mA	0.11 + 40	0.15 + 40
3A<1A	0.14 + 6	0.17 + 6
3A>1A	1.0 + 30	1.0 + 30

Ohms Function (accuracy = ±(% of reading + number of counts))

Range	24 Hour	90 Day	1 Year
30 ohm	0.023 + 35	0.027 + 41	0.034 + 41
300 ohm	0.0045 + 4	0.012 + 5	0.017 + 5
3K ohm	0.0035 + 2	0.011 + 2	0.016 + 2
30K ohm	0.0035 + 2	0.011 + 2	0.016 + 2
300K ohm	0.0035 + 2	0.011 + 2	0.016 + 2
3M ohm	0.0052 + 2	0.011 + 2	0.016 + 2
30M ohm	0.036 + 2	0.066 + 2	0.078 + 2

AC Volts Function 1 Year Limits (accuracy = ±(% of reading + number of counts))

Frequency	300mV Range	3V,30V Range	300V Range
20Hz-50Hz	1.14 + 163	1.14 + 102	1.18 + 102
50Hz-100Hz	0.46 + 163	0.46 + 103	0.50 + 102
100Hz-20KHz	0.29 + 163	0.26 + 102	0.33 + 102
20KHz-50KHz	0.56 + 247	0.41 + 180	0.55 + 180
50KHz-100KHz	1.74 + 882	1.05 + 825	1.26 + 825
100KHz-300KHz		10.1 + 3720 (30V Range Only)	

AC Current Function 1 Year Limits (accuracy = ±(% of reading + number of counts))

Frequency	300mA Range	3A Range
20Hz-50Hz	1.54 + 163	2.24 + 163
50Hz-1KHz	0.81 + 163	1.50 + 163
1KHz-10KHz	0.72 + 163	1.42 + 163
10KHz-20KHz	0.86 + 163	1.56 + 163

Table 6-7. Changes to Table 4-3
DC Volts Test Limits

3478A Input	3478A Range	3478A Set Up	24 Hour Limits high	24 Hour Limits low	90 Day Limits high	90 Day Limits low	1 Year Limits high	1 Year Limits low
Short	30mV	DCV	+00.0035mV	-00.0035mV	+00.0041mV	-00.0041mV	+00.0041mV	-00.0041mV
Short	300mV		+000.004mV	-000.004mV	+000.005mV	-000.005mV	+000.005mV	-000.005mV
Short	3V		+0.00002V	-0.00002V	+0.00002V	-0.00002V	+0.00002V	-0.00002V
Short	30V		+00.0003V	-00.0003V	+00.0003V	-00.0003V	+00.0003V	-00.0003V
Short	300V		+000.002V	-000.002V	+000.002V	-000.002V	+000.002V	-000.002V
+30mV	30mV		+30.0116mV	+29.9884mV	+30.0131mV	+29.9869mV	+30.0161mV	+29.9839mV
+300mV	300mV		+300.019mV	+299.981mV	+300.027mV	+299.973mV	+300.065mV	-299.935mV
+300mV	3V		+0.30003V	+0.29997V	+0.30004V	+0.29996V	+0.30008V	+0.29992V
+1V	3V		+1.00005V	+0.99995V	+1.00008V	+0.99992V	+1.00021V	+0.99979V
-1V	3V		-1.00005V	-0.99995V	-1.00008V	-0.99992V	-1.00021V	-0.9979V
-3V	3V		-3.00012V	-2.99988V	-3.00020V	-2.99980V	-3.00058V	-2.99942V
+3V	3V		+3.00012	+2.99988V	+3.00020V	+2.99980V	+3.00058V	+2.99942V
+3V	3V	AZ Off	+3.00015	+2.99985V	+3.00023V	+2.99977V	+3.00061V	+2.99939V
+3V	3V	AZ On, 4 Digit	+3.0002V	+2.9998V	+3.0003V	+2.9997V	+3.0007V	+2.9993V
+3V	3V	3 Digit	+3.001V	+2.999V	+3.001V	+2.999V	+3.002V	+2.998V
+3V	30V	5 Digit	+03.0005V	+02.9995V	+03.0005V	+02.9995V	+03.0009V	+02.9991V
+10V	30V		+10.0008V	+09.9992V	+10.0010V	+09.9990V	+10.0023V	+09.9977V
+30V	30V		+30.0018V	+29.9982V	+30.0025V	+29.9975V	+30.0063V	+29.937V
+30V	30V	AZ Off	+30.0029V	+29.9971V	+30.0036V	+29.9964V	+30.0074V	+29.9926V
+300V	300V	AZ On	+300.019V	+299.981V	+300.025V	+299.975V	+300.062V	+299.938V

Table 6-8. Changes to Table 4-5
AC Volts Test Limits

3478A Input	3478A Range	3478A Set Up	1 Year Limits high	1 Year Limits low
.028V,20KHz	300mV	ACV	028.244mV	027.756mV
0.28V,20KHz	300mV		280.975mV	279.025mV
0.28V,20KHz	3V		0.28175V	0.27825V
1.5V,20KHz	3V		1.50492V	1.49508V
2.8V,20KHz	3V		2.80830V	2.79170V
2.8V,20KHz	30V		02.8175V	02.7825V
28V,20KHz	30V		28.0830V	27.9170V
28V,20KHz	300V		028.194V	027.806V
280V,20KHz	300V		281.026V	278.947V
0.28V,50KHz	300mV		281.815mV	278.185mV
2.8V,50KHz	3V		2.81328V	2.78672V
28V,50KHz	30V		28.1328V	27.8672V
280V,50KHz	300V		281.720V	278.280V
0.28V,100KHz	300mV		285.754V	274.246mV
0.28V,100KHz	3V		0.29449V	0.26881V
2.8V,100KHz	3V		2.86765V	2.76235V
15V,100KHz	30V		15.2400V	14.7600V
28V,100KHz	30V		28.3765V	27.6235V
280V,100KHz	300V		284.353V	275.647V
25V,300KHz	30V		28.8970V	22.1030V
2.8V,50Hz	3V		2.81391V	2.78609V
2.8V,20Hz	3V		2.83294V	2.76706V

6-15. 2545A24740 & below. Instruments above this serial number changed the value of C501 and R501 from .1uF and 100K to .01uF and 200K respectively. The change allows the display segments to be lit while the front panel Test/Reset button is held by changing the RC time constant. The new parts are recommended for replacement purposes. It is recommended that both parts be replaced to ensure the correct RC time constant. The recommended replacement parts are listed in Table 5-3.

6-16. **2545A**26015 & below. These instruments have a different cover and frame design. The new parts are not compatible with these instruments. A Mechanical and Miscellaneous Parts list for these instruments is given in Table 6-9. Figures 6-6 through 6-13 show the disassembly and mechanical parts for these instruments. The following paragraphs give a disassembly procedure for these instruments.

6-17. 3478A Disassembly Procedure (Serial Prefix 2545 and below)

6-18. The following is the disassembly procedure for the 3478A.

a. Refer to Figure 6-7. Loosen the screw on the 3478A's top cover (MP6). Turn the instrument over and loosen the screw on the bottom cover (MP10).

b. Remove the bottom cover by pulling the cover toward the rear of the 3478A and away from the multimeter.

c. Turn the 3478A right side up. Remove the top cover by pulling the cover toward the rear of the 3478A and away from the multimeter.

d. See Figure 6-11. Remove the front and rear panel wires from clamp MP26.

e. See Figure 6-9. Loosen and remove the screws on both the left and right side side covers (MP4). Remove the covers.

f. Refer to Figure 6-10. Loosen and remove screws MP21 on the bottom plastic shield (MP23). Remove the shield.

g. Refer to Figure 6-9. Loosen and remove screws MP17 on the left side frame of the 3478A.

h. Refer to Figure 6-9. Loosen and remove screws MP17 at the 3478A's side frames (on both the left and right side). Remove the side frames.

i. Unplug the HP-IB, Voltmeter Complete, External Trigger, and Rear Panel Terminal Cables from the mother board (A1 assembly).

j. Carefully remove the rear frame (MP18) and rear panel (MP7) by pulling the frame toward the rear and away from the instrument.

k. Refer to Figure 6-11. Using a small flat blade screwdriver, insert the scewdriver blade into one slot of the top trim (MP29) and remove the trim. Then loosen and remove screws MP20 from the top side of the front frame (MP13).

l. Refer to Figure 6-10. Loosen screws MP20 from the bottom side of the front frame (MP13).

m. Remove the front frame (MP13) by pulling the frame toward the rear and away from the instrument. Be careful that the casting does not get tangled up in the wires going to the front and rear terminals.

n. Refer to Figure 6-12. Loosen and remove screws MP32 (also see Figure 6-13), from the bottom front panel bracket (MP33) and remove the bracket.

o. Unplug the cable from the display.

Table 6-9. 3478A Mechanical and Miscellaneous Parts (Prefix 2545 & below)

Ref. Des.	Part Number	C D	Qty.	Description
MP1	0370-0603	4	1	Pushbutton (Power Switch)
MP2	0370-0604	5	1	Pushbutton (Front/Rear Switch)
MP3	03478-60202	8	1	Front Panel Assembly
MP4	5061-9505	3	2	Side Cover
MP5	5061-1164	4	4	Binding Post
MP6	5061-9429	0	1	Top Cover
MP7	03478-00202	2	1	Rear Panel
MP8	0380-1289	5	2	Stud (HP-IB Connector)
MP8	2190-0918	4	2	Washer (HP-IB Connector)
MP8	2090-0577	1	2	Nut (HP-IB Connector)
MP9	1250-0083	1	2	Connector RF BNC (VM Complete, Ext. Trig.)
MP9	2190-0016	3	2	Washer (BNC Connector)
MP9	2950-0043	8	2	Nut (BNC Connector)
MP10	5061-9441	6	1	Bottom Cover
MP11	5040-7201	8	4	Feet
MP12	1460-1345	4	2	Tilt Stand
MP13	5021-5813	6	1	Front Frame
MP14	03478-61205	3	2	Side Frame
MP15	0515-1331	5	8	Screw
MP16	5001-0438	7	2	Trim
MP17	0515-0212	9	7	Screw
MP18	5021-5814	5	1	Rear Frame
MP19	0403-0164	3	6	Guide PC Board
MP20	0515-0211	8	4	Screw
MP21	0515-0217	5	2	Screw (Plastic Shield)
MP21	3050-0222	8	2	Washer (Plastic Shield)
MP22	7120-8607	2	1	Metric Label
MP23	03478-00604	8	1	Plastic Shield
MP24	7120-3185	1	1	Warning Label
MP25	7120-3530	0	1	Warning Label
MP26	1400-1122	0	1	Cable Clamp
MP27	03478-61902	7	1	Front/Rear Switch Assembly
MP28	4135-0416	3	1	Push Rod (Front/Rear Switch)
MP29	5040-7203	0	1	Top Trim
MP30	4135-0415	2	1	Push Rod (Power Switch)
MP31	0624-0034	4	2	Screw
MP32	0624-0333	6	6	Screw
MP33	03478-01204	6	2	Front Panel Bracket
MP34	0515-0226	4	2	Screw
MP35	5061-1166	6	1	Display

p. Refer to Figure 6-12. Loosen and remove screws MP34 from the front panel connector. Remove the front panel assembly from the mother board (A1 assembly). This completes the disassembly of the 3478A. If the display is to be removed, continue with the next step.

q. To remove the display from the front panel, loosen and remove screws MP32 (see Figure 6-13) from the front panel assembly. Remove the display. This completes the front panel disassembly.

6-19. The front panel assembly was changed to the part number shown in Table 6-9 and 5-4. On these instruments, if replacing the front panel assembly, it is necessary to keep the old front panel mounting brackets and screws. The front panel assembly part number shown in Table 6-9 and 5-4 does not include these parts. If the old brackets and screws are not available use the following part numbers. The original front panel assembly is no longer available.

Bracket (2 required) 03478-01204
Screws (4 required) 0624-0333

6-20. 2619A26305 & below. These instruments use a Revision C 03478-66501 printed circuit board. Figure 6-4 shows schematic 1 for the Revision C circuit boards. Figure 6-5 shows schematic 3 for the Revision C circuit boards. Schematics 2 and 4 do not change.

6-21. For replacement purposes on Revision C printed circuit boards, substitute the parts listed in Table 6-10 for the parts in Table 5-3.

Table 6-10. Changes to Table 5-3

Ref. Des.	Part Number	CD	Qty.	Description
C510	0160-4571	8	1	CAPACITOR-FXD .1uF +80-20
C761	0180-2394	1	1	CAPACITOR-FXD 3000uF 20V
CR500	1901-0518	8	1	DIODE 70V 410mW
L201	9100-1641	0	1	COIL-CHOKE 240uH
R109	0686-2245	3	1	RESISTOR 220K 5%)
R202	0683-2445	9	1	RESISTOR 220K .05
R203	0683-2445	9	1	RESISTOR 240K .05
205	0683-4715	0	1	RESISTOR 470 .05
R553	0683-5125	8	1	RESISTOR 5100 .05
RT706	0837-0223	4	1	THMS-PTC 10.30
RT707	0837-0223	4	1	THMS-PTC 10 .30
U515	1820-1144	6	1	IC SN74LS02N

Table 6-11. Changes to Table 5-3

Ref. Des.	Part Number	CD	Qty.	Description
U502	1818-1752	7	1	IC MK36000N5 64K

6-22. 2619A32988 & below. These instruments use a Revision D 03478-66501 printed circuit board. The schematics given in section VII of this manual apply to these instruments with the following changes.

6-23. Changes to schematic 3. Delete R471. Delete C519.

6-24. Changes to schematic 4. Delete R769.

6-25. U502 was changed to a 28 pin part from a 24 pin part. The pin numbers of the 24 pin part are shown on schematic 3 in Figure 6-5. Use the part listed in Table 6-11 for replacement on Revision D printed circuit boards.

6-26. **2619A**37719 & below. The aluminum cover and chassis were modified after this serial number. The new parts are not compatible with these older instruments. For replacement purposes, substitute the parts listed in Table 6-12 for the parts in Table 5-4.

6-27. **2619A**37794 & below. Instruments with this serial number and below were manufactured using Pozidriv screws. To facilitate the production process, later instruments were manufactured using Torxdriv screws. If the Torxdriv screws are not desired for replacement purposes, substitute the parts listed in Table 6-13 for the parts in Table 5-4.

Table 6-12. Changes to Table 5-4

Ref. Des.	Part Number	CD	Qty.	Description
FRM1	03478-00101	0	1	Chassis Assembly
CVR1	03478-04101	8	1	Cover

Table 6-13. Changes to Table 5-4

Ref. Des.	Part Number	CD	Qty	Description
SCW2	0515-0063	8	2	Screw, Power Switch Mounting
SCW3	0515-0226	5	2	Screw, Motherboard to Front Panel
SCW4	0515-0918	2	7	Screw
SCW5	0515-1146	0	1	Screw, Bottom cover
SCW6	0624-0333	6	2	Screw, Display to Front Panel

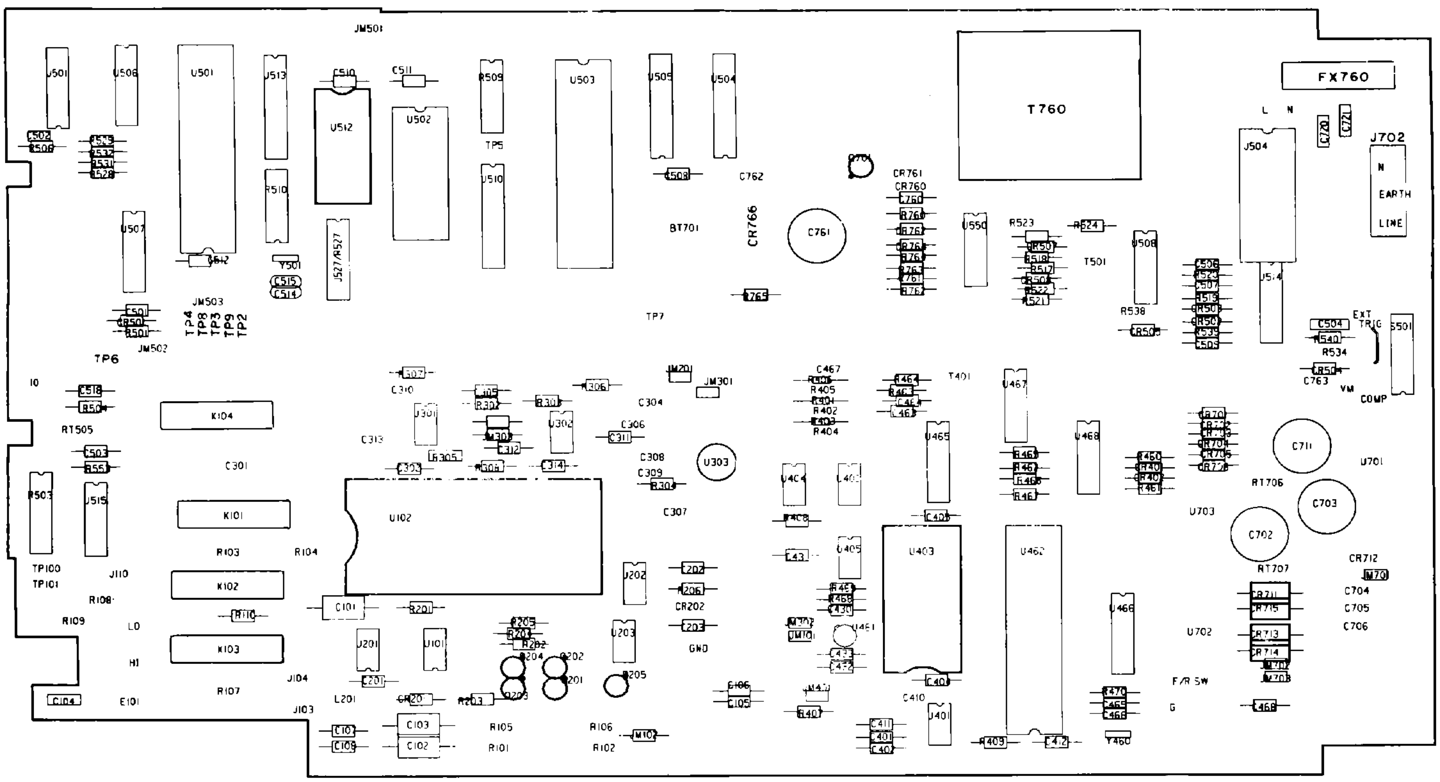

Figure 6-1. Component Locator for A1 Assemblies (Revision B)

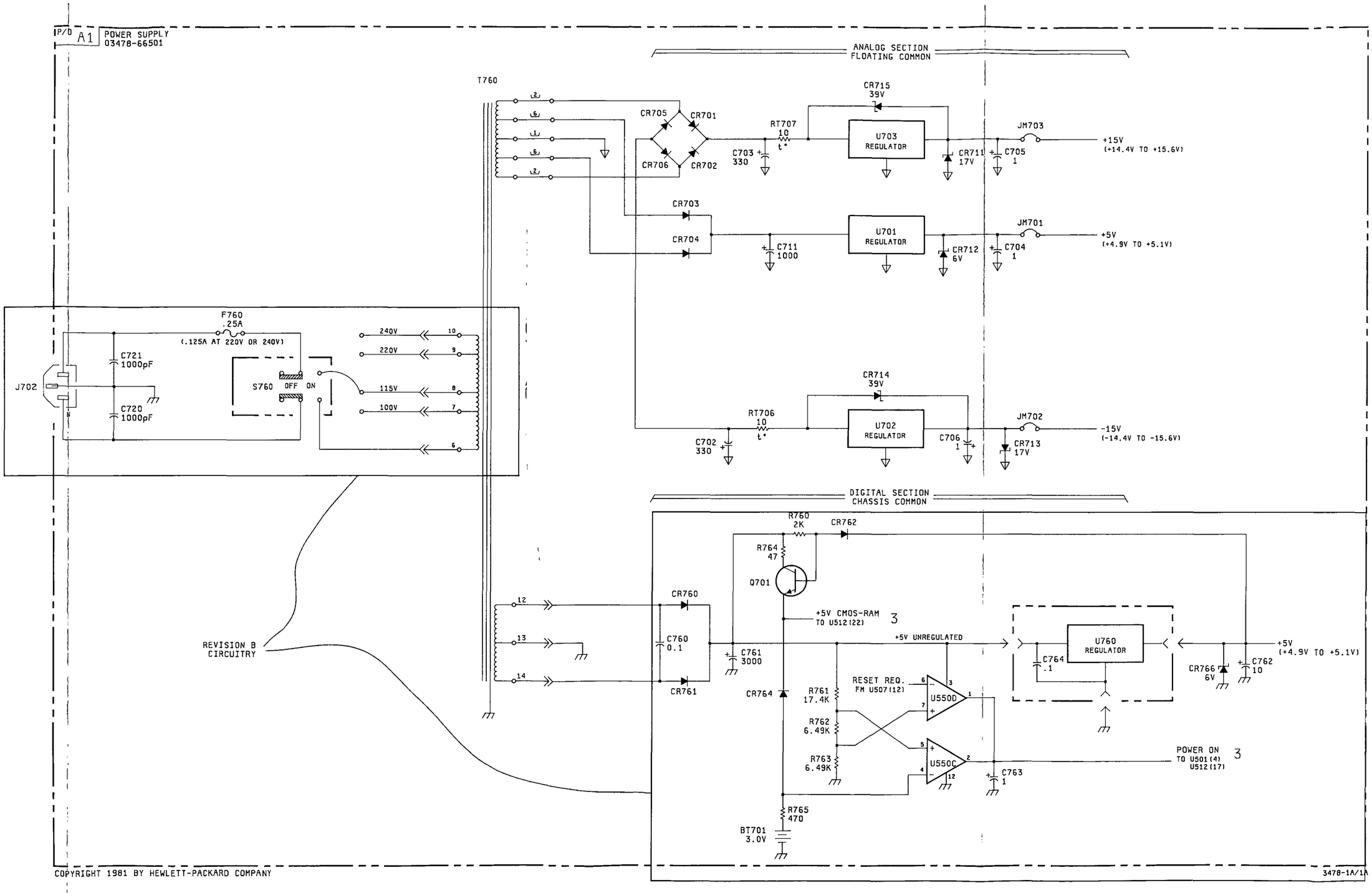

Figure 6-2. Schematic 4 (Revision B Boards)

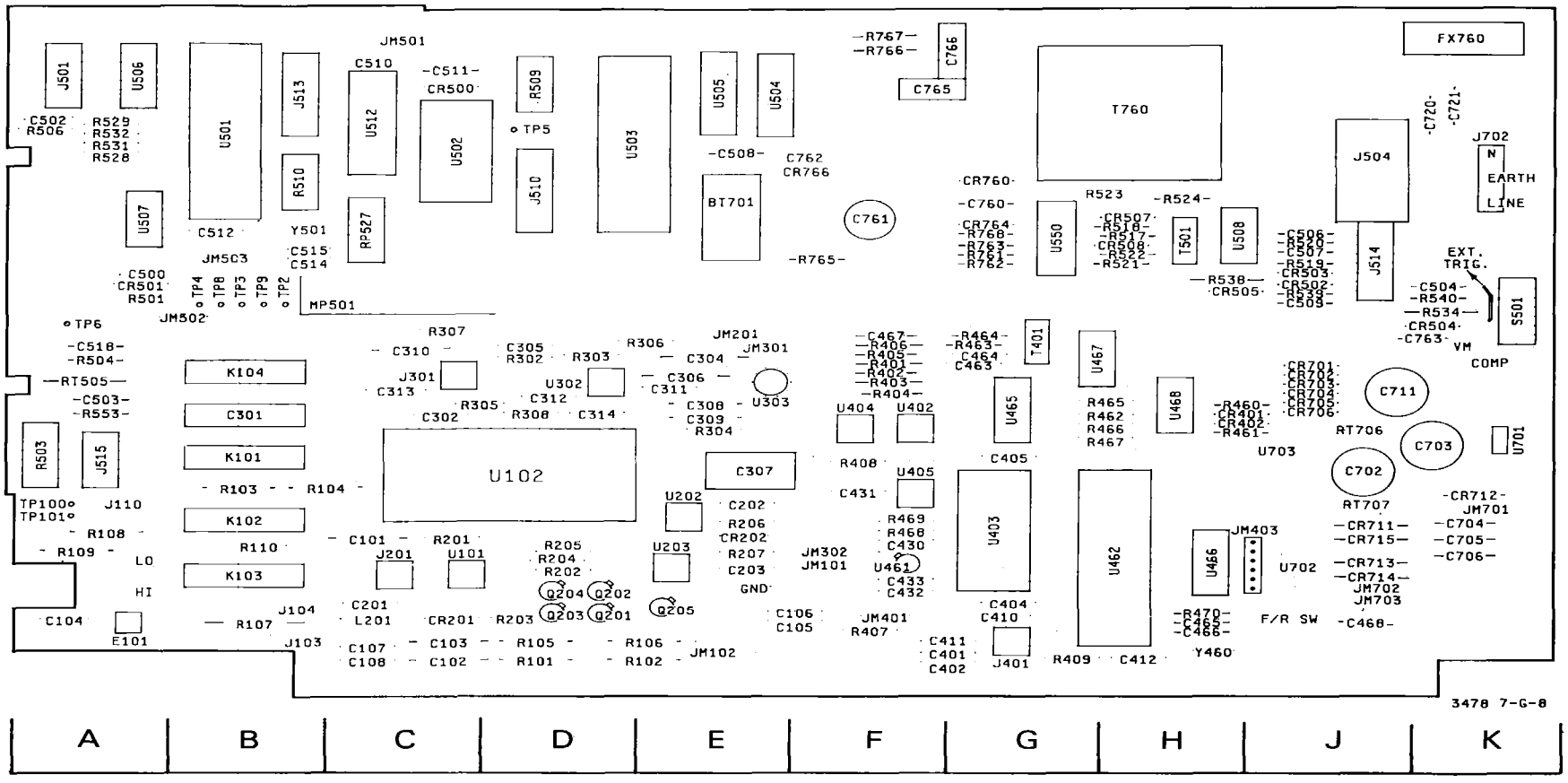

Figure 6-3. Revision C Component Locator

COMPONENT LOCATOR TABLE FOR SCHEMATIC 1 (INPUT CIRCUITRY)

Component	Col.
C101	C
C102	C
C103	C
C104	A
C105	E,F
C106	E,F
C107	C
C108	C
C201	C
C202	E
C203	E
C301	B
C314	D
CR201	C

Component	Col.
CR202	E
E101	A
JM101	F
JM201	E
K101	B
K102	B
K103	B
K104	B
L201	C
Q201	D

Component	Col.
Q202	D
Q203	D
Q204	D
Q405	E
R101	D
R102	E
R103	B
R104	B,C
R105	D
R106	E
R107	B
R108	A
R109	A
R110	B

Component	Col.
R201	C
R202	D
R203	D
R204	D
R205	D
R206	E
R207	E
TP100	A
TP101	A
U101	C,D
U102	C,D
U201	E
U202	E
U203	E

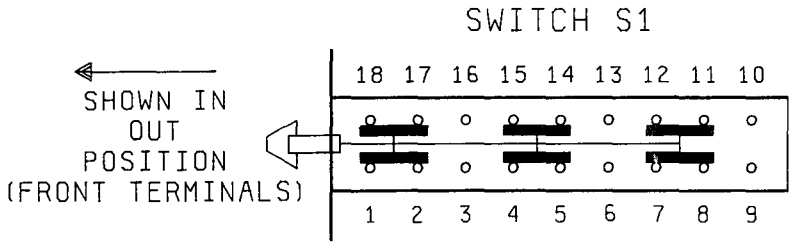

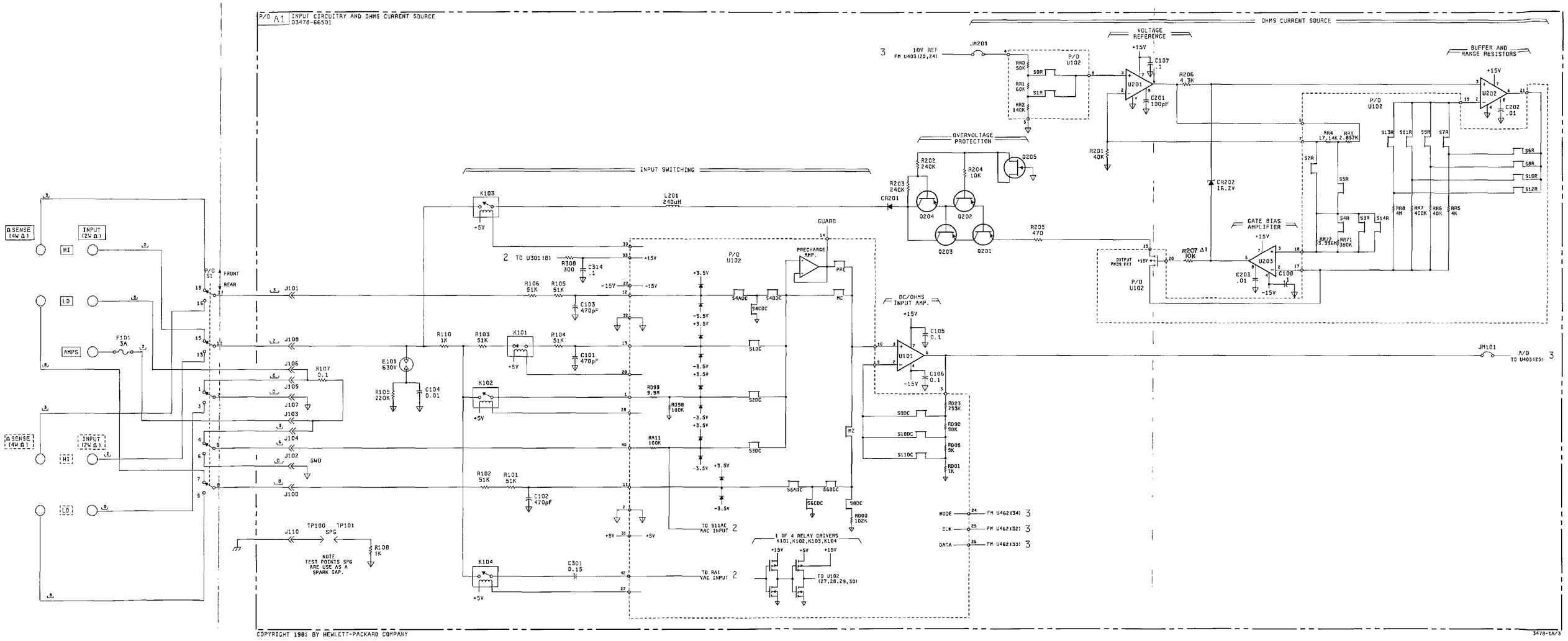

Figure 6-4. Input Circuitry and Ohms Current Source
6-9/6-10

COMPONENT LOCATOR TABLE FOR SCHEMATIC 3 (LOGIC)

Component	Col.
C401	F,G
C402	F,G
C404	G
C405	G
C410	G
C411	F,G
C412	H
C430	F
C431	F
C432	F
C433	F
C463	G
C464	G
C465	H
C466	H
C467	F
C468	J
C501	A
C502	A
C503	A
C504	K
C506	J
C507	J
C508	E
C509	J
C510	C
C511	C
C512	B
C514	B,C
C515	B,C
C518	A
CR401	H
CR402	H
CR500	A

Component	Col.
CR501	A
CR502	J
CR503	J
CR504	J,K
CR505	H
CR507	H
CR508	H
J501	A
J504	J
JM401	F
JM403	H
JM501	C
JM502	A,B
JM503	B
R401	E
R402	F
R403	F
R404	F
R405	F
R406	F
R407	F
R408	F
R409	G
R460	H
R461	H
R462	G,H
R463	G
R464	G
R465	G,H
R466	G,H
R467	G,H
R468	F

Component	Col.
R469	F
R470	H
R501	A
R503	A
R504	A
R506	A
R509	D
R510	B
R517	H
R518	H
R519	J
R520	J
R521	H
R522	H
R523	H
R524	H
R528	A
R529	A
R531	A
R532	A
R534	K
R538	H
R539	J
R553	A
RT505	A
RP527	C
S501	K
T401	G
T501	H
TP2	B

Component	Col.
TP3	B
TP4	B
TP5	D
TP6	A
TP7	E
TP8	B
TP9	B
U401	G
U402	F
U403	G
U404	F
U405	F
U461	F
U462	G,H
U465	G
U466	H
U467	G,H
U468	H
U501	B
U502	C
U503	D,E
U504	E,F
U505	E
U506	A
U507	A
U510	D
U512	C
U513	B
U514	J
U515	A
U550	G
Y460	H
Y501	B

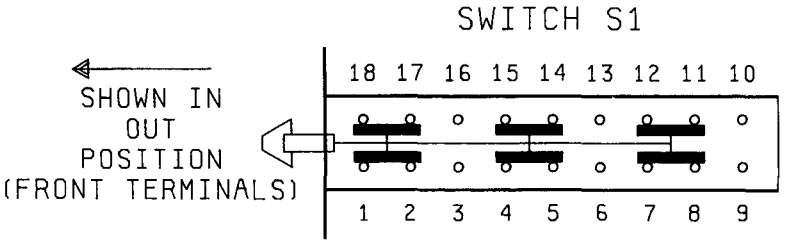

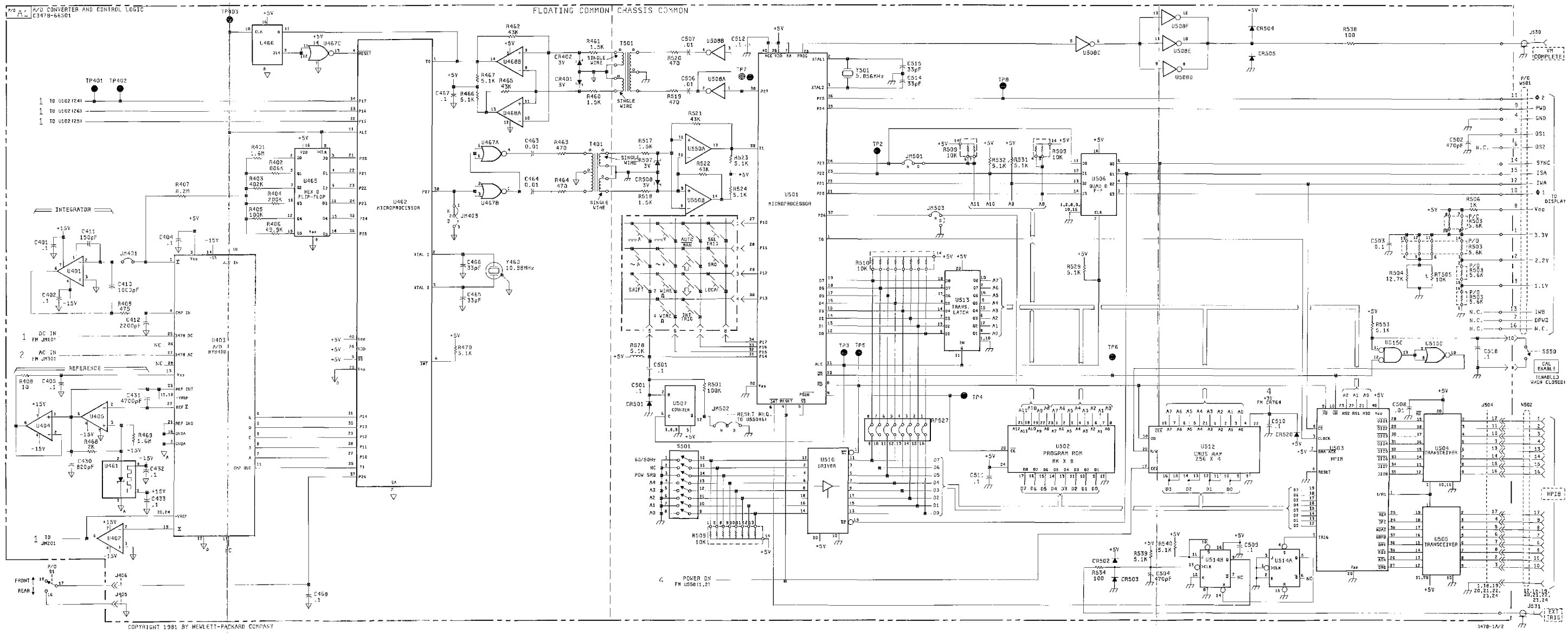

Figure 6-5. A/D Converter and Control Logic
6-11/6-12

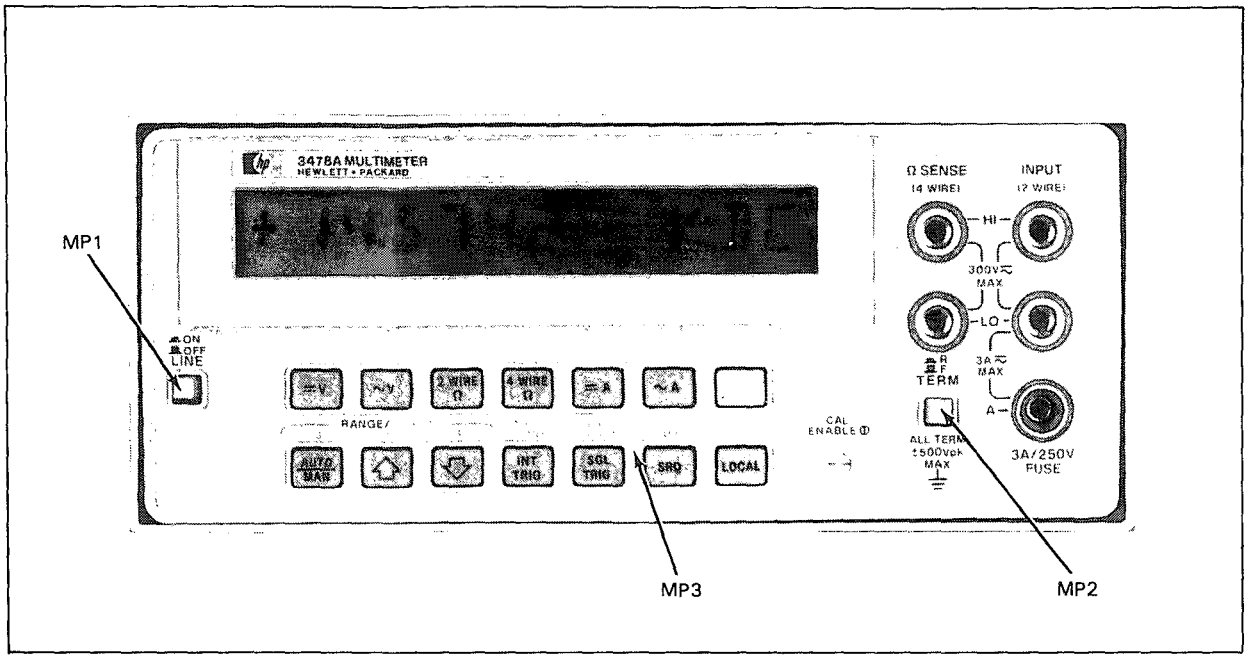

Figure 6-6. 3478A Front Panel View

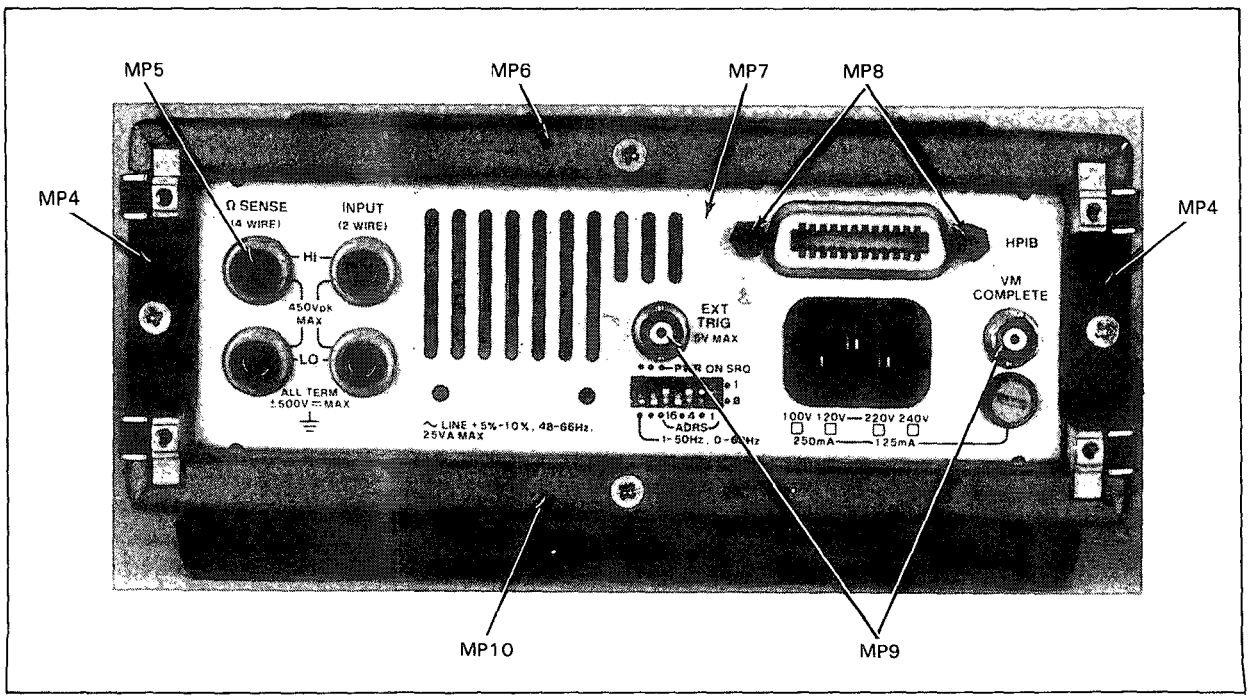

Figure 6-7. 3478A Rear Panel View

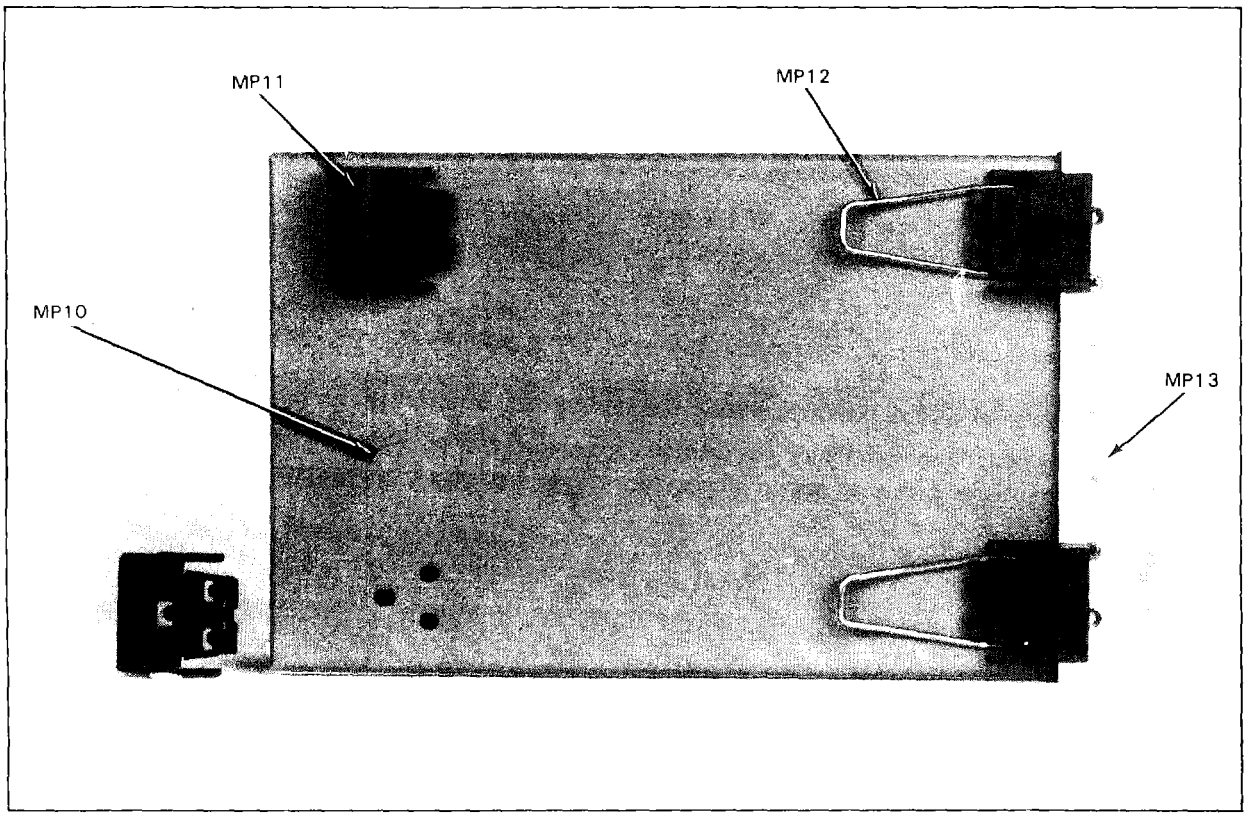

Figure 6-8. 3478A Bottom View

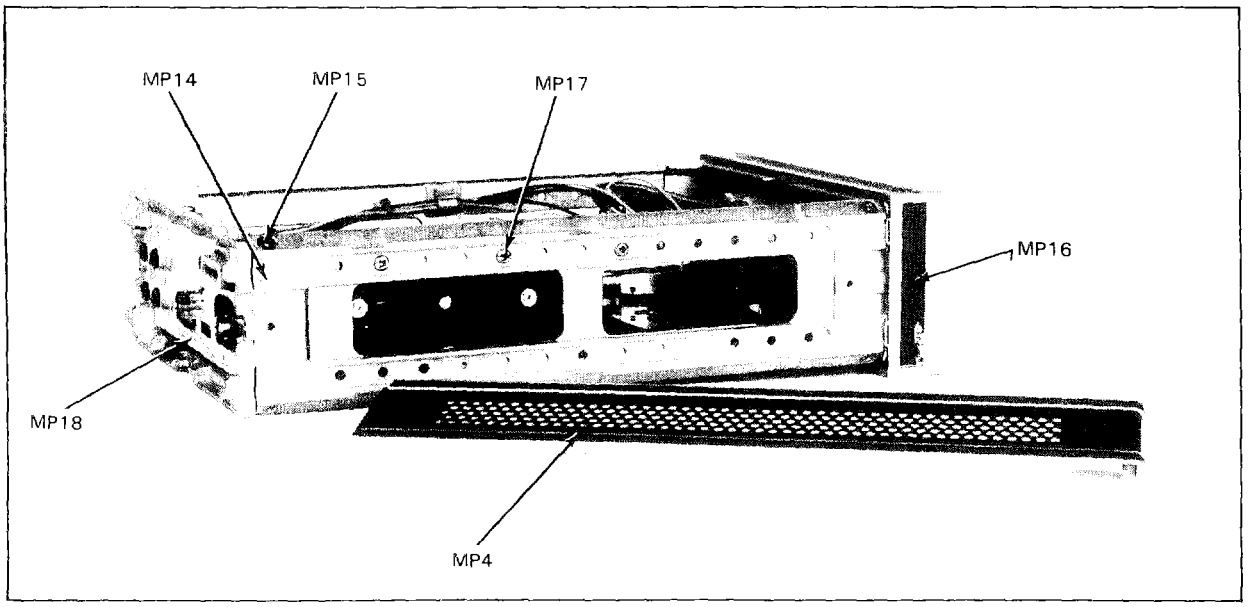

Figure 6-9. 3478A Left Side View

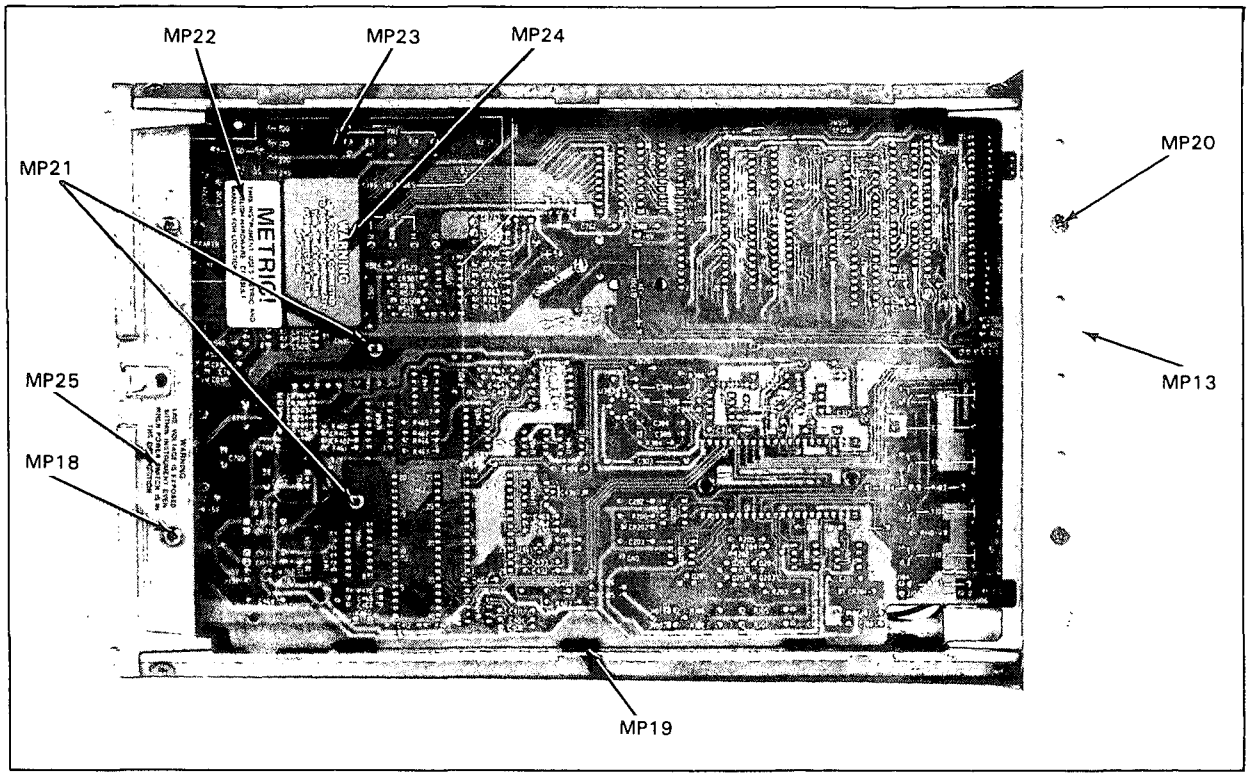

Figure 6-10. Bottom View with Cover Removed

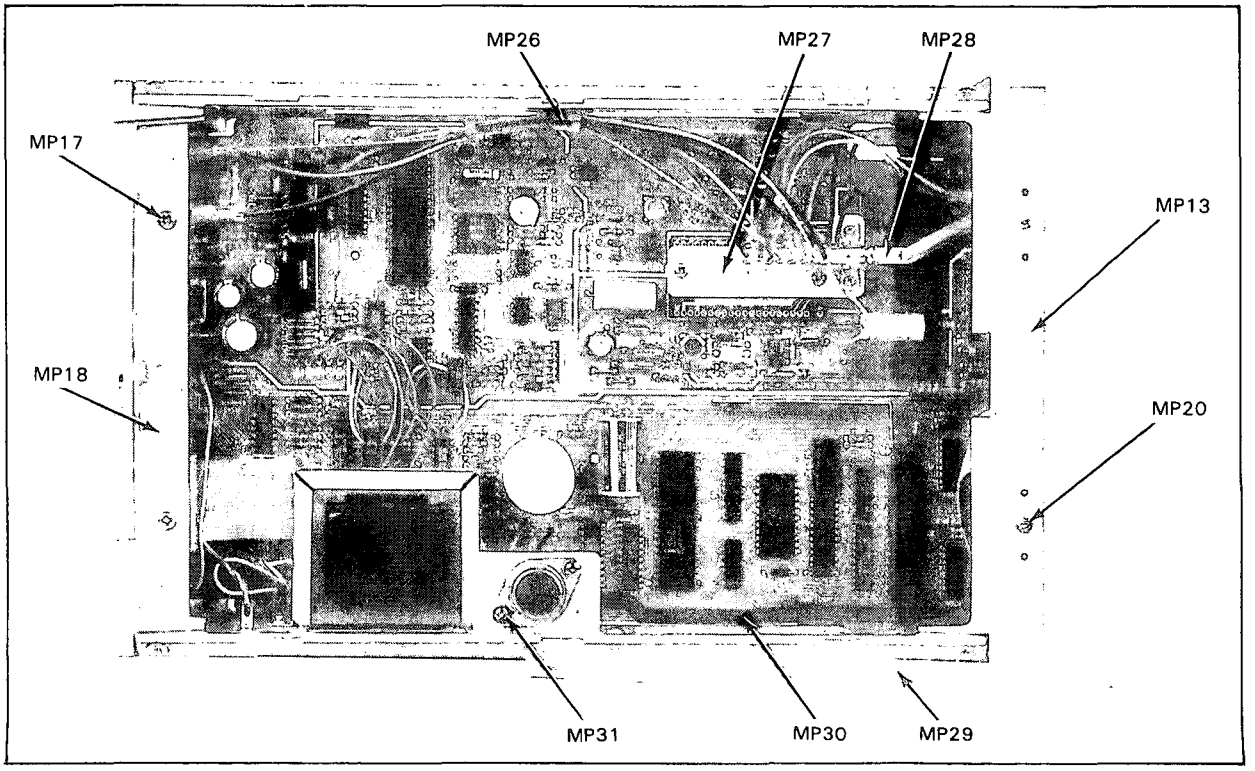

Figure 6-11. Top View With Cover Removed

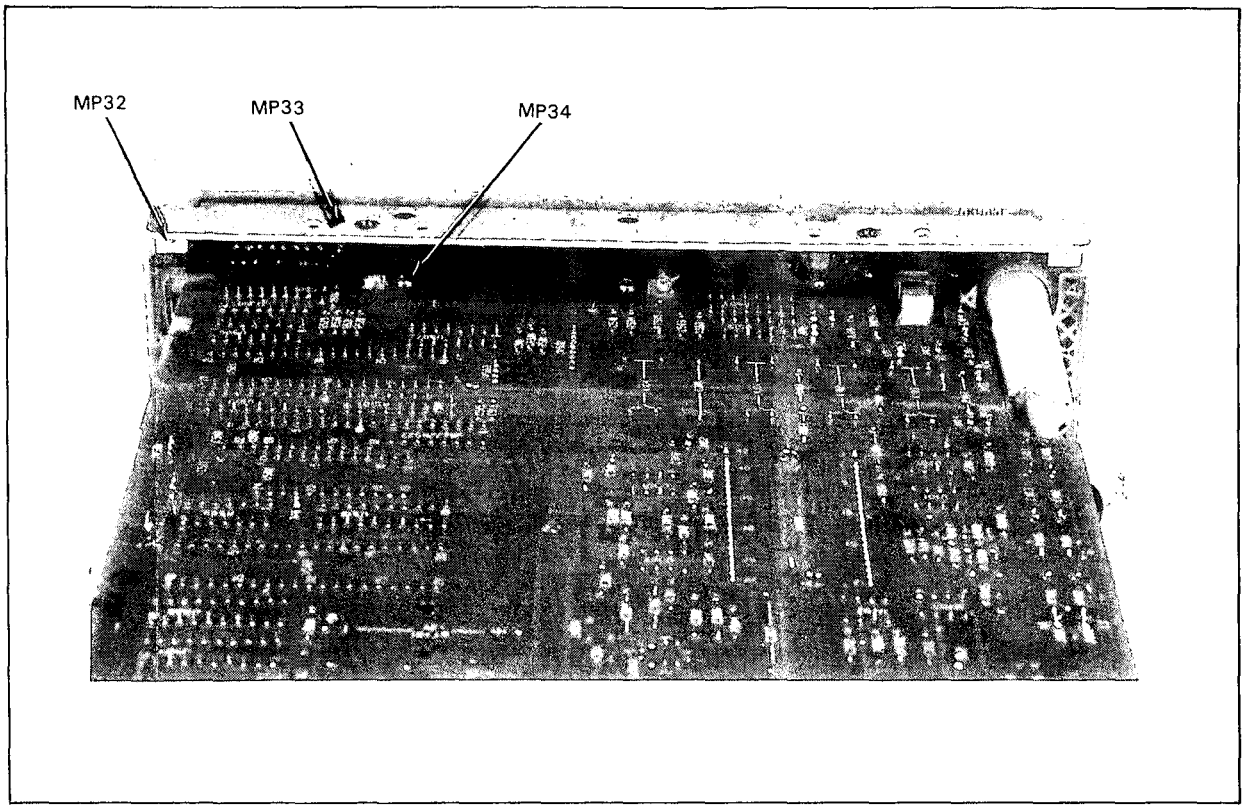

Figure 6-12. Front Panel Bracket View

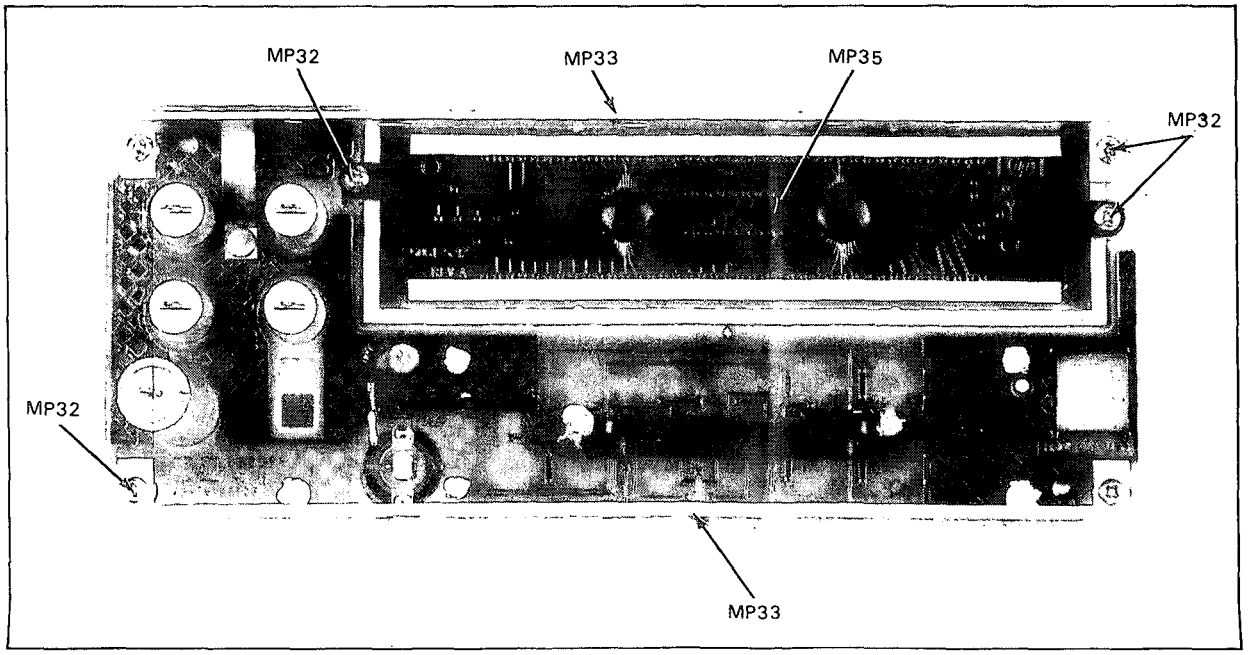

Figure 6-13. Front Panel Assembly

PERFORMANCE TEST CARD
90 DAY LIMITS

Hewlett-Packard Model 3478A

Digital Multimeter

Serial Number_____

Test Performed By_____

Date_____

Reference Temperature_____

DC Volts Test
(Serial Prefix 2520A and below)

Step#	Input to 3478A	Set-Up and Configuration	High Limit	Reading	Low Limit	Test Pass	Test Fail
1	Open	Press TEST/RESET				___	___
2	Short	30mV Range	+00.0041mV	_____	−00.0041mV	___	___
3	Short	300mV Range	+000.005mV	_____	−000.005mV	___	___
4	Short	3V Range	+0.00002V	_____	−0.00002V	___	___
5	Short	30V Range	+00.0003V	_____	−00.0003V	___	___
6	Short	300V Range	+000.002V	_____	−000.002V	___	___
7	+30mV	30mV Range	+30.0131mV	_____	+29.9869mV	___	___
8	+300mV	300mV Range	+300.027mV	_____	+299.973mV	___	___
9	+300mV	3V Range	+0.30004V	_____	+0.29996V	___	___
10	+1V	3V Range	+1.00008V	_____	+0.99992V	___	___
11	−1V	3V Range	−0.99992V	_____	−1.00008V	___	___
12	−3V	3V Range	−2.99980V	_____	−3.00020V	___	___
13	+3V	3V Range	+3.00020V	_____	+2.99980V	___	___
14	+3V	Autozero Off	+3.00023V	_____	+2.99977V	___	___
15		Autozero On					
16	+3V	4 Digit Disp	+3.0003V	_____	+2.9997V	___	___
17	+3V	3 Digit Disp	+3.001V	_____	+2.999V	___	___
18		5 Digit Disp					
19	+3V	30V Range	+03.0005V	_____	+02.9995V	___	___
20	+10V	30V Range	+10.0010V	_____	+09.9990V	___	___
21	+30V	30V Range	+30.0041V	_____	+29.9959V	___	___
22	+30V	Autozero Off	+30.0041V	_____	+29.9959V	___	___
23		Autozero On					
24	+300V	300V Range	+300.029V	_____	+299.971V	___	___
25	Open	30mV				___	___
26	See Below	CMR Test				___	___

CMR Test

1. Connect a 1K Ohm resistor between the HI and LO INPUT Terminals of the 3478A.
2. Note the 3478A's reading.
3. Apply 450V dc between the 3478A's chassis (rear panel) and HI INPUT Terminal.
4. The 3478A should remain within .045mV of the reading in step 2.

PERFORMANCE TEST CARD
24 HOUR LIMITS

Hewlett-Packard Model 3478A

Digital Multimeter

Serial Number _____

Test Performed By _____

Date _____

Reference Temperature _____

DC Volts Test
(Serial Prefix 2520A and below)

Step#	Input to 3478A	Set-Up and Configuration	High Limit	Reading	Low Limit	Test Pass	Test Fail
1	Open	Press TEST/RESET				___	___
2	Short	30mV Range	+00.0035mV	_____	−00.0035mV	___	___
3	Short	300mV Range	+000.004mV	_____	−000.004mV	___	___
4	Short	3V Range	+0.00002V	_____	−0.00002V	___	___
5	Short	30V Range	+00.0003V	_____	−00.0003V	___	___
6	Short	300V Range	+000.002V	_____	−000.002V	___	___
7	+30mV	30mV Range	+30.0116mV	_____	+29.9884mV	___	___
8	+300mV	300mV Range	+300.019mV	_____	+299.981mV	___	___
9	+300mV	3V Range	+0.30003V	_____	+0.29997V	___	___
10	+1V	3V Range	+1.00005V	_____	+0.99995V	___	___
11	−1V	3V Range	−0.99995V	_____	−1.00005V	___	___
12	−3V	3V Range	−2.99988V	_____	−3.00012V	___	___
13	+3V	3V Range	+3.00012V	_____	+2.99988V	___	___
14	+3V	Autozero Off	+3.00015V	_____	+2.99983V	___	___
15		Autozero On					
16	+3V	4 Digit Disp	+3.0002V	_____	+2.9998V	___	___
17	+3V	3 Digit Disp	+3.001V	_____	+2.999V	___	___
18		5 Digit Disp					
19	+3V	30V Range	+03.0006V	_____	+02.9994V	___	___
20	+10V	30V Range	+10.0008V	_____	+09.9992V	___	___
21	+30V	30V Range	+30.0018V	_____	+29.9982V	___	___
22	+30V	Autozero Off	+30.0029V	_____	+29.9971V	___	___
23		Autozero On					
24	+300V	300V Range	+300.019V	_____	+299.981V	___	___
25	Open	30mV Range					
26	See Below	CMR Test					

CMR Test

1. Connect a 1K Ohm resistor between the HI and LO INPUT Terminals of the 3478A
2. Note the 3478A's reading.
3. Apply 450V dc between the 3478A's chassis (rear panel) and HI INPUT Terminal.
4. The 3478A should remain within .045mV of the reading in step 2.

PERFORMANCE TEST CARD
1 YEAR LIMITS

Hewlett-Packard Model 3478A

Digital Multimeter

Serial Number_____

Test Performed By_____

Date_____

Reference Temperature_____

DC Volts Test
(Serial Prefix 2520A and below)

Step#	Input to 3478A	Set-Up and Configuration	High Limit	Reading	Low Limit	Test Pass	Test Fail
1	Open	Press TEST/RESET				___	___
2	Short	30mV Range	+00.0041mV	_____	−00.0041mV	___	___
3	Short	300mV Range	+000.005mV	_____	−000.005mV	___	___
4	Short	3V Range	+0.00002V	_____	−0.00002V	___	___
5	Short	30V Range	+00.0003V	_____	−00.0003V	___	___
6	Short	300V Range	+000.002V	_____	−000.002V	___	___
7	+30mV	30mV Range	+30.0161mV	_____	+29.9839mV	___	___
8	+300mV	300mV Range	+300.065mV	_____	+299.935mV	___	___
9	+300mV	3V Range	+0.30008V	_____	+0.29992V	___	___
10	+1V	3V Range	+1.00021V	_____	+0.99979V	___	___
11	−1V	3V Range	−0.99979V	_____	−1.00021V	___	___
12	−3V	3V Range	−2.99942V	_____	−3.00058V	___	___
13	+3V	3V Range	+3.00058V	_____	+2.99942V	___	___
14	+3V	Autozero Off	+3.00061V	_____	+2.99939V	___	___
15		Autozero On					
16	+3V	4 Digit Disp	+3.0007V	_____	+2.9993V	___	___
17	+3V	3 Digit Disp	+3.002V	_____	+2.998V	___	___
18		5 Digit Disp					
19	+3V	30V Range	+03.0009V	_____	+02.9991V	___	___
20	+10V	30V Range	+10.0023V	_____	+09.9977V	___	___
21	+30V	30V Range	+30.0063V	_____	+29.9937V	___	___
22	+30V	Autozero Off	+30.0074V	_____	+29.9926V	___	___
23		Autozero On					
24	+300V	300V Range	+300.062V	_____	+299.938V	___	___
25	Open	30mV Range				___	___
26	See Below	CMR Test				___	___

CMR Test

1. Connect a 1K Ohm resistor between the HI and LO INPUT Terminals of the 3478A.
2. Note the 3478A's reading.
3. Apply 450V dc between the 3478A's chassis (rear panel) and HI INPUT Terminal.
4. The 3478A should remain within .045mV of the reading in step 2.

PERFORMANCE TEST CARD
1 YEAR LIMITS

Hewlett-Packard Model 3478A

Digital Multimeter

Serial Number_____

Test Performed By_____

Date_____

Reference Temperature_____

AC Volts Test
(Serial Prefix 2520A and below)

Step#	Input to 3478A	Set-Up and Configuration	High Limit	Reading	Low Limit	Test Pass	Test Fail
1	Open	Press TEST/RESET				___	___
2	Open	ACV Function					
3	.028V,20KHz	300mV Range	028.244mV	_____	027.756mV	___	___
4	0.28V,20KHz	300mV Range	280.975mV	_____	279.025mV	___	___
5	0.28V,20KHz	3V Range	0.28175V	_____	0.27825V	___	___
6	1.5V,20KHz	3V Range	1.50492V	_____	1.49508V	___	___
7	2.8V,20KHz	3V Range	2.80830V	_____	2.79170V	___	___
8	2.8V,20KHz	30V Range	02.8175V	_____	02.7825V	___	___
9	28V,20KHz	30V Range	28.0830V	_____	27.9170V	___	___
10	28V,20KHz	300V Range	028.194V	_____	027.806V	___	___
11	280V,20KHz	300V Range	281.026V	_____	278.974V	___	___
12	0.28V,50KHz	300mV Range	281.815mV	_____	278.185V	___	___
13	2.8V,50KHz	3V Range	2.81328V	_____	2.78672V	___	___
14	28V,50KHz	30V Range	28.1328V	_____	27.8672V	___	___
15	280V,50KHz	300V Range	281.720V	_____	278.280V	___	___
16	0.28V,100KHz	300mV Range	285.754mV	_____	274.246mV	___	___
17	0.28V,100KHz	3V Range	0.29449V	_____	0.26881V	___	___
18	2.8V,100KHz	3V Range	2.86765V	_____	2.76235V	___	___
19	15V,100KHz	30V Range	15.2400V	_____	14.7600V	___	___
20	28V,100KHz	30V Range	28.3765V	_____	27.6235V	___	___
21	280V,100KHz	300V Range	284.353V	_____	275.674V	___	___
22	25V,300KHz	30V Range	28.8970V	_____	22.1030V	___	___
23	2.8V,50Hz	3V Range	2.8139V	_____	2.78609V	___	___
24	2.8V,20Hz	3V Range	2.83294V	_____	2.76706V	___	___

SECTION VII
SERVICE

7-1. INTRODUCTION

7-2. This section of the manual has information on how to troubleshoot and repair the 3478A multimeter with the information given in Service Groups. Preliminary troubleshooting procedures to select an appropriate group are also given in Paragraph 7-27. It is recommended to use the procedures first, before going to a service group. Section VII also has the 3478A's complete Theory of Operation (in Service Group F), the complete schematics (in Service Group G), and the necessary safety considerations. The section is separated as follow:

NOTE

The 3478A's Theory of Operation is in Service Group F (next to the last group).

a. Safety Considerations - paragraph 7-3.

b. Recommended Test Equipment - paragraph 7-8.

c. Miscellaneous Information - paragraph 7-10.

1. Instrument Disassembly (PC Board Replacement) - see Section V.
2. Fuse Replacement - paragraph 7-13.

d. Troubleshooting - paragraph 7-15.

1. Introduction - paragraph 7-16.
2. 3478A Self-Test - paragraph 7-18.
3. Service Group Selection - paragraph 7-27.

7-3. SAFETY CONSIDERATIONS

7-4. The 3478A has been designed with international safety standards. To maintain these standards, the cautions, warnings, and other safety related information in this manual must be followed when servicing the instrument. Servicing should only be done by qualified service personnel.

7-5. Calibration, maintenance, or repair of the instrument with covers removed while any power or voltage is applied, should be avoided as much as possible. If any work is done while power and/or voltage is applied, the work should be carried out by a skilled person who is aware of the hazards involved.

WARNING

Any interruptions of the protective grounding conductor (inside or outside the instrument) or disconnections of the protective earth terminal can make the instrument dangerous. Intentional interruption of the protective grounding conductor is strictly prohibited.

7-6. It is possible for capacitors inside the instrument to remain charged when the instrument has been turned off or its power source disconnected.

7-7. Make sure that only the recommended fuse type (fast blow, correct current rating, etc.) is used for replacemant. The use of repaired fuses and the short-circuiting of fuse holders must be avoided.

WARNING

The service information given in this manual is normally used with the instrument's protective covers removed and with power applied. Voltage or signals at many points may, if contacted, result in personal injury.

7-8. RECOMMENDED TEST EQUIPMENT

7-9. The recommended test equipment is listed in Table 4-2 in Section IV of this manual.

7-10. MISCELLANEOUS INFORMATION

7-11. Instrument Disassembly (PC Board Replacement)

7-12. To replace the 3478A's main printed circuit board, the instrument must be completely disassembled. The procedure to disassemble the instrument is in Section V (Replaceable Parts) of this manual.

7-13. Fuse Replacement

7-14. The 3478A has two fuses, one fuse is the main power fuse and the other one is to protect the instrument in the DC and AC Current Functions. The fuses are replaced as follows:

a. **Main Power Fuse.** To replace the main power fuse, first remove power from the 3478A. With a flatblade screwdriver rotate the fuse terminal (at the rear panel) counterclockwise. Remove the fuse and reinstall with a replacement (refer to this manual's Section II or Table 5-3 for the correct value). Reinstall the terminal.

b. **Amps Fuse.** The Amps Fuse is located inside the 3478A's A (Amps) terminal (on the front panel). To replace the fuse, first remove any cables connected to the A terminal and then turn the instrument off. Use the side slots on the A terminal to rotate the terminal counterclockwise. The terminal and fuse will then protrude from the front panel. Remove the terminal and fuse, and replace the fuse with a 3A at 250V fast blow fuse (-hp- Part No. 2110-0003). Return the terminal and fuse to the front panel.

7-15. TROUBLESHOOTING

CAUTION

The instrument contains CMOS Integrated Circuits which are susceptible to failure due to static discharge. It is especially important that grounded tools and wrist straps be used when handling or troubleshooting these components.

7-16. Introduction

7-17. The following paragraphs and Service Groups have troubleshooting information and procedures for the -hp- Model 3478A Digital Multimeter. Before troubleshooting and repairing the 3478A, make sure the failure is in the instrument rather than from any external connections. Also make sure the instrument is calibrated.

7-18. 3478A Self-Test

7-19. The 3478A Self-Test is designed to make sure that most of the instrument's internal logic circuitry is operational. The test is selected when the 3478A is first turned on or by pressing the blue Shift button and then the SGL/TRIG (TEST/RESET) button. The following paragraphs have the Self-Test Failures and some troubleshooting information.

7-20. U501 RAM Fails (U.C. RAM FAIL). This test shows that the Chassis Common CPU's (Main Controller U501) RAM has failed its internal self test. The failure is normally caused by a defective U501. To make sure U501 is the cause, go to Service Group D, paragraph 7-D-21, for further troubleshooting.

7-21. Control ROM Fails (U.C. ROM FAIL). This indicates that the 3478A has failed its internal ROM self test. The Control ROM (U502) is the most likely cause. Go to Service Group D, paragraph 7-D-19, for further troubleshooting.

7-22. Calibration RAM Fails (CAL RAM FAIL). If this test fails, an attempt made to calibrate the RAM was unsuccessful. Go to Service Group D, paragraph 7-D-23 (Calibration Ram Failure) to check the CMOS RAM.

NOTE

The CAL ENABLE Switch on the front panel should not be in the CAL/ENABLE position under normal use. It should only be in that position to calibrate or troubleshoot the instrument.

7-23. Uncalibrated Instrument (UNCALIBRATED). Calibrate the 3478A.

7-24. A/D Link Fails (A:D LINK FAIL). The failure shows that the Chassis Common Processor (Main Controller, U501) is unable to communicate with the Floating Common Processor (A/D Controller, U462). Go to Service Group D, paragraph 7-D-44 (Isolation Circuitry Troubleshooting) for troubleshooting.

7-25. A/D Slope Error (A:D SLOPE ERR). If the A/D Converter is unable to do a proper conversion, this test fails. Go to Service Group D, paragraph 7-D-35 (A/D Converter Troubleshooting) for troubleshooting.

7-26. A/D Test Fails (A:D TEST FAIL). This shows that the A/D Converter has failed its internal self test. Go to Service Group D, paragraph 7-D-35 (A/D Converter Troubleshooting) for troubleshooting.

7-27. Service Group Selection

Table 7-1. 3478A Service Groups

Service Group	Title
A	DC Volts and DC Current Troubleshooting
B	AC Volts and AC Current Troubleshooting
C	Ohms Troubleshooting
D	A/D Converter and Logic Troubleshooting
E	Power Supplies and Reference Troubleshooting
F	Theory of Operation
G	Schematics

7-28. The Service Groups have the Troubleshooting Information, Theory of Operation, and Schematics for the 3478A. Service Group F has the Theory of Operation and Service Group G has the Schematics. The rest of the groups have troubleshooting information.

7-29. The correct Service Group is selected according to failure. Once the failure has been determined, go to the recommended group. The following paragraphs lists possible failures, general troubleshooting information, and corresponding Service Group(s). The Service Groups are also listed in Table 7-1.

7-30. DC Volts and DC Current Failure (Service Group A). Typical DC Volts and DC Current Failures are Overload, Inaccurate, Constant Zero, Floating, or Noisy Readings. Troubleshooting information for these failures is in Service Group A. The following explains the failures.

a. **Overload.** An overload is caused when the reading taken by the instrument appears to be larger than the input actually is. This can be caused by a saturated DC/Ohms Input Amplifier or by the A/D Converter.

b. **Inaccurate Readings.** Inaccurate readings are normally caused when the measurement circuitry is not linear. This is because the 3478A is calibrated using zero and full scale inputs. Therefore, the full scale and zero readings must be good, but any other reading can be inaccurate.

c. **Constant Zero Reading.** A constant zero reading is normally caused when either the input to the DC/Ohms Input Amplifier or the input to the A/D Converter is shorted to ground (common). It can also be caused if no runup is done by the A/D Converter.

d. **Floating Reading.** A floating reading is when the 3478A displays a certain reading (with no input applied) which does not change, after an input is applied to the multimeter. This can be caused by the A/D Converter and if there is an open in the Input Circuitry.

e. **Noisy Readings.** Noisy readings can be caused by the Input Circuitry and A/D Converter.

7-31. AC Volts and AC Current Failures (Service Group B). AC Volts and AC Current Failures can be Overload, Inaccurate, Floating, or Noisy Readings. Troubleshooting information for these failures is in Service Group B. Before going to the service group, check and make sure the DC Volts and DC Current Function is operating correctly. The DC Volts and DC Current failures are explained in paragraph 7-30. The following explains the AC Volts and AC Current Failures.

a. **Overload.** An overload is caused when the reading taken by the instrument appears to be larger than the input actually is. This can be caused by a saturated AC to DC Converter or the A/D Converter.

b. **Inaccurate Readings.** Inaccurate readings are normally caused when the AC to DC Converter has poor frequency response.

c. **Floating Reading.** A floating reading is when the 3478A displays a certain reading (with no input applied) which does not change, after an input is applied to the multimeter. This can be caused if there is an open circuit in the AC to DC Converter or A/D Converter.

d. **Noisy Readings.** Noisy readings can be caused by the amplifiers and the RMS Converter in the AC to DC Converter.

7-32. Ohms Failures (Service Group C). Typical Ohms Failures can be Overload, Inaccurate, Floating, or Noisy Readings. Troubleshooting information for these failures is in Service Group C. Before going to the service group, check and make sure the DC Volts and DC Current Functions are operating correctly. The DC Volts and DC Current failures are explained in paragraph 7-30. The following explains the Ohms Failures.

a. **Overload.** An overload is caused when the reading taken by the instrument appears to be larger than the input actually is. This can be caused if the ohms current is too large. Since the DC/Ohms Input Amplifier or the A/D Converter can also cause an overload, make sure the DC Volts Function is operating correctly (go to paragraph 7-30, if the function fails).

b. **Inaccurate Readings.** Inaccurate ohms readings can be caused if the ohms current changes value under different loads. Inaccuracy can alo be caused if the measurement circuitry is not linear. Make sure the DC Volts Function is operating correctly (go to paragraph 7-30, if the function fails).

c. **Constant Zero Reading.** A constant zero reading is normally caused when the Ohms Current Source does not supply any ohms current. The failure can also be caused when either the input to the DC/Ohms Input Amplifier or the input to the A/D Converter is shorted to ground (common). Make sure the DC Volts Function is operating correctly (go to paragraph 7-30, if the function fails).

d. **Floating Reading.** A floating reading is when the 3478A displays a certain reading (with no input applied) which does not change, after an input is applied to the multimeter. This can also be caused by the A/D Converter and the Input Circuitry. Since this is not an ohms failure, make sure the DC Volts Function is operating correctly (go to paragraph 7-30, if the function fails).

e. **Noisy Readings.** Noisy readings can be caused by a noisy ohms current.

7-33. Chassis Common Logic Failures (Service Group D). Chassis Common Logic Failures consists of Turn-On, Display, Keyboard, Control ROM, Calibration RAM (CMOS RAM), HP-IB Failures, and miscellaneous failures (e.g. Voltmeter Complete, Exter-

nal Trigger, etc). Go to Service Group D, paragraph 7-D-5, if any of the failures are detected. The following explains the failures.

a. **Turn-On Failure.** A Turn-On Failure is when the 3478A's Keyboard Display, and HP-IB is dead (i.e., the 3478A is completely inoperative). This is most likely caused by the Main Controller (U501) and associated circuitry.

b. **Inoperative Display.** An Inoperative Display is when part or all of the 3478A's display is inoperative. This can be caused by the display itself or the Main Controller Circuitry.

c. **Inoperative Keyboard.** An Inoperative Keyboard is when part or all of the 3478A's keyboard is inoperative. This can be caused by the keyboard itself or the Main Controller Circuitry.

d. **Control ROM Failure.** A failure caused by the Control ROM normally shows up as a "U.C, ROM FAIL" (after the 3478A's Self-Test). The ROM (U502) itself can be the cause in addition to the Main Controller (U501) and latch U513. A defective ROM can also show up as a Turn-On Failure.

e. **U.C. RAM Fails.** This failure shows up as a "U.C. RAM FAIL" after the 3478A's Self-Test routine. It shows that the Main Controller's internal RAM has failed its self-test.

f. **Calibration RAM (CMOS RAM) Failure.** This failure can show up as a "CAL RAM Fail" after the 3478A's Self-Test routine. The RAM (U512) itself can be the cause or the Main Controller Circuitry.

g. **HP-IB (Remote) Failure.** This failure is most likely caused by the HP-IB Chip (U503), but can also be caused by other circuitry in the Chassis Common Logic Circuitry.

7-34. Floating Common Logic Failures (Service Group D). Floating Common Logic Failures are normally caused by the A/D Converter or the A/D Controller (U462). Go to Service Group D, paragraph 7-D-31 for troubleshooting. The following explains the failures.

a. **Overload, Constant Zero, Floating, or Noisy Readings.** Any one of these failures can be caused by the A/D Converter or the 3478A's Input Circuitry (Input Switching or DC/Ohms Input Amplifier). Since both circuitry can cause a failure, a procedure to isolate the circuitry is in both Service Group D and Group A. For a definition of the failures, go to paragraph 7-30 (DC Volts Failures).

b. **A/D Slope Error.** This failure can be caused by the A/D Converter or the A/D Controller and shows up as an "A:D SLOPE ERR", after a Self-Test routine.

c. **A/D Test Fails.** This failure can also be caused by the A/D Converter or the A/D Controller. It shows up as an "A:D TEST FAIL", after a Self-Test routine.

d. **Input Hybrid (U102) Failure.** Since the Input Hybrid receives its set up information from the A/D Controller, the controller can cause the hybrid to fail.

7-35. Isolation Circuit Failure (Service Group D). This failure will normally show up as an "A:D Link Fail" (after the 3478A's Self-Test routine). The failure can be caused by the Isolation Circuitry, or either the Main Controller (U501) or A/D Controller (U462). Troubleshooting information is in Service Group D, paragraph 7-D-44.

7-36. Power Supplies and Reference Troubleshooting (Service Group E). Service Group E has some information on how to troubleshoot the power supplies and Reference Circuitry.

SERVICE GROUP A

DC VOLTS AND DC CURRENT TROUBLESHOOTING

Service Group A Contents

Title	Paragraph
Introduction	7-A-1
Pre-Troubleshooting Information	7-A-3
DC Volts Troubleshooting	7-A-5
Overload, Floating, Constant Zero (with input applied), or Noisy Readings on All Ranges	7-A-7
Constant Zero Readings (with no input applied) on All Ranges	7-A-9
Overload, Constant Zero, Floating, or Noisy Readings on Some Ranges	7-A-11
Inaccurate Readings on All Ranges	7-A-17
Protection Circuitry Troubleshooting	7-A-19
Input Circuitry Troubleshooting	7-A-21
Overload Readings on All Ranges	7-A-23
Constant Zero Readings on All Ranges	7-A-25
Floating Readings on All Ranges	7-A-27
Noisy Readings on All Ranges	7-A-29
DC Current Troubleshooting	7-A-31
Checking the A/D Controller	7-A-33

7-A-1. INTRODUCTION

7-A-2. This Service Group has the DC Volts and DC Current troubleshooting information for the 3478A. The Service Group is symptoms oriented (i.e., what fails) with two different levels of troubleshooting. The first level determines the general area of the 3478A that causes the failure and the second level has specific troubleshooting information for the area that fails. Unless otherwise specified, refer to Schematic 1 when using the troubleshooting procedures.

CAUTION

The instrument contains CMOS Integrated Circuits (e.g. U102) which are extremely susceptible to failures due to static discharge. It is especially important that grounded tools and wrist straps be used when handling or troubleshooting these components.

7-A-3. PRE-TROUBLESHOOTING INFORMATION

7-A-4. Before doing any troubleshooting procedures, perform the following:

a. Check the 3478A's Floating Common Power Supplies and make sure they are stable, have the correct value, and are not oscillating. The power supplies are as follows (see Schematic 4):

Power Supply	Checked at	Voltage Level
+ 5V	JM701	+ 4.9V to + 5.1V
−15V	JM702	−14.4V to −15.6V
+15V	JM703	+14.4V to +15.6V

b. Check and make sure the Reference Supplies are at the correct level and quiet. The +10V supply can be checked at U405 pin 6, the -10V supply at U404 pin 6, and the buffered +10V supply at JM201 (see Schematic 3).

c. Make sure the Front/Rear Switch is making good contact and not open.

7-A-5. DC VOLTS TROUBLESHOOTING

7-A-6. Typical DC Volts Failures are Overload, Inaccurate, Constant Zero, Floating, or Noisy Readings on all or some ranges. The following paragraphs have the failures and the troubleshooting procedures (see paragraph 7-30 for a description of these failures).

7-A-7. Overload, Floating, Constant Zero (with input applied), or Noisy Readings on All Ranges

7-A-8. If a failure is noted on all ranges, the failure can be caused by the Input Circuitry (Input Switching or DC/Ohms Input Amplifier) or by the A/D Converter. To determine the inoperative circuitry, do the procedure which follows this paragraph (the same procedure is

also in Service Group D). If the procedure has been performed already, ignore the procedure and go to paragraph 7-D-21 for troubleshooting. If it has not been performed, do the following:

a. Set the 3478A to the DC Volts Function and the 3V Range.

b. Turn Autozero off by pressing the blue Shift button and then the INT/TRIG (AUTOZERO) button.

c. Apply a stable +3V dc to the INPUT Terminals.

d. With a Digital Voltmeter (like the 3456A) measure for +10V at JM101.

e. Make sure the reading on the test voltmeter is a stable +10V. If the reading on the test voltmeter is a stable +10V, the A/D Converter is at fault. Go to Service Group D for troubleshooting.

f. If the reading on the test voltmeter is wrong (overload, constant zero, floating, or noisy), unsolder and lift the end of jumper JM101 which is connected to the A/D Converter (toward the rear of the 3478A).

g. If the reading on the test voltmeter is now good, the A/D Converter is at fault. Go to Service Group D for troubleshooting.

h. If the reading is still wrong, the Input Circuitry (Input Switching and DC/Ohms Input Amplifier) is at fault. Go to paragraph 7-A-21 for troubleshooting.

i. Replace jumper JM101.

7-A-9. Constant Zero Readings (with no input applied) on All Ranges

7-A-10. Since the 3478A's 30V and 300V Ranges will normally have a constant zero reading with no input applied, the other ranges will also be at zero if relay K102 is shorted. Make sure the relay is good and is not being turned on by U102 (zero volts across the coil of K102). If the relay is turned on in the 30mV through 3V Ranges, U102 may be defective. Before replacing U102, make sure the A/D Controller (U462) is good. Go to paragraph 7-A-33 for the SA procedure to check U462, before replacing the hybrid.

7-A-11. Overload, Constant Zero, Floating, or Noisy Readings on Some Ranges

7-A-12. The Input Hybrid (U102) in conjunction with the Input Relays (K101 through K104) is used to select different paths to connect the input signals with the DC/Ohms Input Amplifier. The hybrid is also used to select the amplifier's different gain configurations. Because of this, a relay or U102 can make certain ranges fail.

7-A-13. Overload. An overload condition exists if the DC/Ohms Input Amplifier's feedback circuitry is open. Since the feedback circuitry is in U102, the hybrid is most likely defective. Before replacing U102, make sure the A/D Controller (U462) is good. Go to paragraph 7-A-33 for the SA procedure to check U462, before replacing the hybrid.

7-A-14. Constant Zero Reading. The most likely cause is the Input Hybrid (U102). Before replacing U102, make sure the A/D Controller (U462) is good. Go to paragraph 7-A-33 for the SA procedure to check U462, before replacing the hybrid.

7-A-15. Floating Readings. A floating reading is normally caused when an input path to the DC/Ohms Input Amplifier is open. Check for the following:

a. If the 30mV, 300mV, and 3V Ranges are defective, do the following:

1. Short across the contacts of relay K101.

2. If the ranges are now good, make sure K101 is energized (5V dc across the coil). If K101 is energized, replace the relay. If not, U102 may be defective. Go to paragraph 7-A-33 before replacing U102.

3. If, after replacing K101, the ranges still fail, U102 may be defective. Go to paragraph 7-A-33 before replacing U102.

b. If the 30V and 300V Ranges are defective, do the following:

1. Short across the contacts of relay K102.

2. If the ranges are now good, make sure K102 is energized (5V dc across the coil). If K102 is energized, replace the relay. If not, U102 may be defective. Go to paragraph 7-A-33 before replacing U102.

3. If, after replacing K102, the ranges still fail, U102 may be defective. Go to paragraph 7-A-33 before replacing U102.

7-A-16. Noise. Noise can be caused by a FET switch internal to the Input Hybrid (U102) and U101. Replace U101 and then U102 if noise is noted on some ranges.

7-A-17. Inaccurate Readings on All Ranges

7-A-18. Inaccurate readings normally show up as other than positive full scale readings. This is because the 3478A is calibrated using zero and positive full scale (or 1/3 scale) inputs. Inaccurate readings can be caused by the Input Circuitry (Input Hybrid or DC/Ohms Input Amplifier). Try replacing U101 and then U102.

7-A-19. PROTECTION CIRCUITRY TROUBLESHOOTING

7-A-20. This circuitry consists of E101 and various diodes in U102. If all ranges fail, try replacing E101. If the ranges still fail or some ranges fail, the most likely cause is U102.

7-A-21. INPUT CIRCUITRY TROUBLESHOOTING

7-A-22. The Input Circuitry consists of the Input Switching Circuitry and the DC/Ohms Input Amplifier. Before troubleshooting the circuitry, make sure the failure is not caused by the A/D Converter. Go to paragraph 7-A-5 to determine the faulty circuitry, if it has not been done already.

7-A-23. Overload Readings on All Ranges

7-A-24. An overload can be caused when the output of the DC/Ohms Input Amplifier is too high. This can be caused by an excessive input to the amplifier, open feedback, or a defective amplifier. Do the following:

a. Set the 3478A to the DC Volts Function and the 3V Range.

b. Make sure Autozero is turned off (see paragraph 7-A-8 step b).

c. Short the 3478A's INPUT Terminals.

d. With a high impedance Digital Voltmeter (like the 3456A) measure for zero volts (±1mV) at U101 pin 3 (U102 pin 10).

e. If the reading on the test voltmeter is other than zero volts (i.e., above 1 mV), the Input Hybrid is defective. Replace U102.

f. If the reading is good, connect pin 6 and pin 2 (U102 pin 3 and 9) of U101 to each other. Using the test voltmeter, measure for zero volts (±3mV) at pin 6 of U101.

g. If the reading is good (less than ±3mV), the amplifier feedback circuitry is defective. Replace U102.

h. If the reading is wrong (greater than 3mV), the amplifier is defective. Replace U101.

7-A-25. Constant Zero Readings on All Ranges

7-A-26. A constant zero reading is normally caused when the input or output of the DC/Ohms Input Amplifier is shorted to ground. Make sure pin 1 and pin 13 of U102 and pin 6 of U101 are not shorting to ground. If no shorts are noted, do the following:

a. Set the 3478A to the DC Volts Function and the 3V Range.

b. Make sure Autozero is turned off (see paragraph 7-A-8 step b).

c. Using an external power supply with a 100K ohm resistor in series, apply +3V to pin 3 of U101. (Connect one end of the resistor to pin 3 of U101 and the other end to the power supply.)

d. Using a high impedance Digital Voltmeter (like the 3456A), make sure the voltage at the resistor end connected to pin 3 of U101 is +3V.

e. If the voltage is loaded down, the Input Hybrid is defective. Replace U102.

f. If the voltage is +3V, measure (using the test voltmeter) for approximately +10V at U101 pin 6.

g. If the voltage is incorrect, the Input Amplifier is at fault. Replace U101.

h. If the voltage is good, the Input Hybrid (U102) may be defective. Before replacing U102, make sure the A/D Controller (U462) is good. Go to paragraph 7-A-33 to check the A/D Controller. If the controller is good, replace U102.

7-A-27. Floating Reading on All Ranges

7-A-28. A floating reading is normally caused when an open exists between the DC/Ohms Input Amplifier and the instrument's INPUT Terminals. Before troubleshooting the Input Circuitry, make sure the wire connected from the Front/Rear Switch to J108 is not open. If the wire is good, then do the following:

a. Set the 3478A to the DC Volts Function and the 3V Range.

b. Make sure Autozero is turned off (see paragraph 7-A-8 step b).

c. Using an external power supply, apply +3V to the 3478A's INPUT Terminals.

d. Connect the 3478A's HI INPUT Terminal to U101 pin 3 (U102 pin 10).

e. If the displayed reading on the 3478A is still a floating reading, replace U101.

f. If the displayed reading on the 3478A is +3V, the Input Hybrid (U102) may be at fault. Before replacing U102, make sure the A/D Controller (U462) is good. Go to paragraph 7-A-33 to check the A/D Controller. If the controller is good, replace U102.

7-A-29. Noisy Readings on All Ranges

7-A-30. Noisy readings can be caused by the Input

Hybrid or the DC/Ohms Input Amplifer. Do the following:

a. Set the 3478A to the DC Volts Function and the 3V Range.

b. Make sure Autozero is turned off (see paragraph 7-A-8 step b).

c. If the reading on the 3478A is quiet with Autozero off, the Input Hybrid is defective. Replace U102. If the reading is still noisy, continue with the next step.

d. Connect pin 6 and pin 2 (U102 pin 3 and 9) of U101 to each other.

e. Apply a stable +3V to the 3478A's INPUT Terminals.

f. Using a high impedance Digital Voltmeter (like the 3456A) measure for a stable +3V at U101 pin 3.

g. If the voltage is noisy, replace the Input Hybrid (U102).

h. If the voltage is stable, measure for a stable +3V at pin 6 of U101.

i. If the voltage is noisy, replace U101. If the voltage is stable, replace U102 (Input Hybrid).

7-A-31. DC CURRENT TROUBLESHOOTING

7-A-32. Make sure the DC Volts Function is operating correctly on all ranges, before troubleshooting for dc current failures. Go to paragraph 7-A-5 to troubleshoot for DC Volts Failures. If the DC Volts Function is good, the only components that can cause a current failure are an open current fuse (F101), a defective resistor R107, or the Input Hybrid U102. Make sure F101 and R107 are good. If the resistor and fuse are good, U102 may be defective. Before replacing U102, make sure the A/D Controller (U462) is good. Go to paragraph 7-A-33 to check the A/D Controller. If the controller is good, replace U102.

7-A-33. CHECKING THE A/D CONTROLLER (U462)

7-A-34. Do the following to check the A/D Controller. Refer to Schematic 3.

a. Turn the 3478A off.

b. Move jumpers JM502, JM503, and JM403 to the "D" position (JM403 pin 1 and 2), as shown in Figure 7-A-1.

c. Obtain a Signature Analyzer. Set and connect as follows (shown in Figure 7-A-1):

Start:	TP401 (JM403 pin 6) (⁄)
Stop:	TP402 (JM403 pin 5) (\ )
Clock:	TP403 (JM403 pin 4) (⁄)
Hold:	Out
Self-Test:	Out
Gnd:	Ground Pin (next to C203)

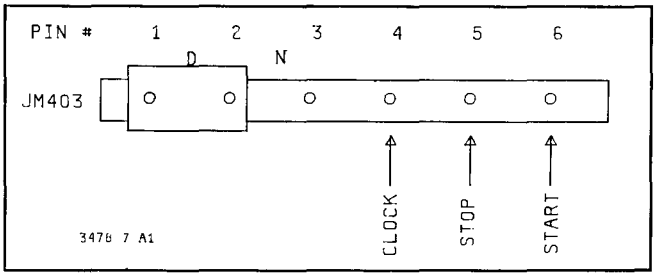

Figure 7-A-1. JM403 SA Connection

d. Turn the 3478A on and check the following signatures.

U462 pin 32: 7ACA
U462 pin 33: 20F0
U462 pin 34: 666H

e. If any signatures are wrong, go to Service Group D (Flowchart D) for troubleshooting.

f. If the signatures are good, the Input Hybrid is defective.

SERVICE GROUP B
AC VOLTS AND AC CURRENT TROUBLESHOOTING

Service Group B Contents

Title	Paragraph
Introduction	7-B-1
AC Volts Troubleshooting	7-B-3
Overload, Floating, or Noisy Readings on All Ranges	7-B-5
Inaccurate Readings on All Ranges	7-B-8
Overload, Inaccurate, Floating or Noisy Readings on Some Ranges	7-B-10
AC Current Troubleshooting	7-B-12
Overload Protection Circuitry Troubleshooting	7-B-14
Checking the A/D Controller	7-B-16

7-B-1. INTRODUCTION

7-B-2. This Service Group has the AC Volts and AC Current troubleshooting information for the 3478A and is symptoms oriented (i.e., what fails). Before troubleshooting for AC Volts or AC Current Failures, make sure the 3478A's DC Volts and DC Current Functions are operating correctly (go to Service Group A, if the functions fail). These functions must be good, before the AC Volts and AC Current Functions can operate.

CAUTION

The instrument contains CMOS Integrated Circuits (e.g. U102) which are extremely susceptible to failures due to static discharge. It is especially important that grounded tools and wrist straps be used when handling or troubleshooting these components.

7-B-3. AC VOLTS TROUBLESHOOTING

7-B-4. An AC Volts Failure can be Overload, Inaccurate, Floating, or Noisy Readings on all or some ranges. The following paragraphs have the failures and troubleshooting procedures (go to paragraph 7-31 for a description of these failures). Unless otherwise specified, refer to Schematic 2 for the following troubleshooting procedures.

7-B-5. Overload, Floating, or Noisy Readings on All Ranges

7-B-6. An overload reading can be caused if one of the amplifiers or the RMS Converter in the AC to DC Converter is saturated. A floating reading can be caused if there is an open circuit in the AC to DC Converter. Noisy readings can be caused by any of the amplifiers in the converter.

7-B-7. Before troubleshooting the AC to DC Converter, make sure relay K104 (see Schematic 1) is good and is energized (5V dc across the coil). If the relay is not energized, U102 may be defective. Before replacing U102, make sure the A/D Controller (U462) is good. Go to paragraph 7-B-16 to check U462. If K104 is good, do the following procedure.

a. Set the 3478A to the AC Volts Function and the 3V Range.

b. Apply a stable 3V at 1KHz sine wave to the 3478A's INPUT Terminals.

c. Using a stable Digital Voltmeter (like the 3456A), measure for approximately +3V dc at jumper JM302.

d. If the reading is a stable +3V dc, do the following:

1. Apply 1V at 1KHz to the INPUT Terminals.

2. If the test voltmeter now reads a stable +1V dc at JM302, the AC to DC Converter is good. Make sure the DC Volts Function is operating correctly.

3. If the DC Volts Function is good, replace the A/D Hybrid (U403).

e. If the reading is other than approximately +3V or noisy, measure for approximately .12V ac at jumper JM303. Make sure the reading on the test voltmeter is stable.

f. If the reading is good, do the following:

1. Measure for a stable 3V ac at pin 4 of U303.

2. If the reading is good, replace U303.

3. If the reading is wrong, lift the end of capacitor C304 which is connected to pin 4 of U303. Then measure for a stable 3V ac at the lifted end of the capacitor.

4. If the voltage is good, replace U303.

5. If the voltage is still wrong, make sure the voltage at pin 6 of U302 is a good stable 3V ac.

6. If the voltage is good, capacitor C304 or C306 is defective.

7. If the voltage is unstable or wrong, connect pin 6 to pin 2 of U302 (use a very short lead to connect the pins, to prevent oscillations). If the reading at pin 6 is now a stable .12V, the feedback resistors of U302 are defective. If the .12V is wrong, replace U302.

g. If the reading at JM303 is other than .12V ac or unstable, replace U301. If the AC Volts Function is still inoperative, U102 may be defective. Before replacing U102, make sure the A/D Controller (U462) is good. Go to paragraph 7-B-16 to check the A/D Controller. If the controller is good, replace U102.

7-B-8. Inaccurate Readings on All Ranges

7-B-9. Since the 3478A's AC to DC Converter is calibrated with an input voltage at a frequency of 1KHz, inaccuracy can result from poor frequency response. Since the high frequency is compensated by C302, make sure the capacitor is good. If the capacitor is good, try replacing U301 and if still inaccurate, try U102.

7-B-10. Overload, Inaccurate, Floating, or Noisy Readings on Some Ranges

7-B-11. Since all ranging of the AC to DC Converter is done in the Input Hybrid U102, the hybrid is the most likely cause for ac failures on some ranges. Before replacing U102, make sure it is not set to an incorrect mode by the A/D Controller (U462). Go to paragraph 7-B-16 to check the A/D Controller. If the controller is good, replace U102.

7-B-12. AC CURRENT TROUBLESHOOTING

7-B-13. Make sure the DC Current and AC Volts Functions are operating correctly on all ranges, before troubleshooting for ac current failures. Go to paragraph 7-B-3 to troubleshoot the AC Volts Failures and Service Group A for the DC Current Failures. If the functions are good, the only component that can cause a failure is the Input Hybrid U102. Before replacing U102, make sure the A/D Controller is good. Go to paragraph 7-B-16 to check the A/D Controller. If the controller is good, replace U102.

7-B-14. OVERLOAD PROTECTION CIRCUITRY TROUBLESHOOTING

7-B-15. All of the ac functions overload protection circuitry is in U102. Replace the hybrid, if defective.

7-B-16. CHECKING THE A/D CONTROLLER (U462)

7-B-17. Do the following to check the A/D Controller. Refer to Schematic 3.

a. Turn the 3478A off.

b. Move jumpers JM502, JM503, and JM403 to the "D" position (JM403 pin 1 and 2), as shown in Figure 7-B-1.

c. Obtain a Signature Analyzer. Set and connect as follows (shown in Figure 7-B-1):

Start:	TP401 (JM403 pin 6) (⁄)
Stop:	TP402 (JM403 pin 5) (\ )
Clock:	TP403 (JM403 pin 4) (⁄)
Hold:	Out
Self-Test:	Out
Gnd:	Ground Pin (next to C203)

d. Turn the 3478A on and check for the following signatures.

U462 pin 32: 7ACA
U462 pin 33: 20F0
U462 pin 34: 666H

e. If any signatures are wrong, go to Service Group D (Flowchart D) for troubleshooting.

f. If the signatures are good, the Input Hybrid is defective.

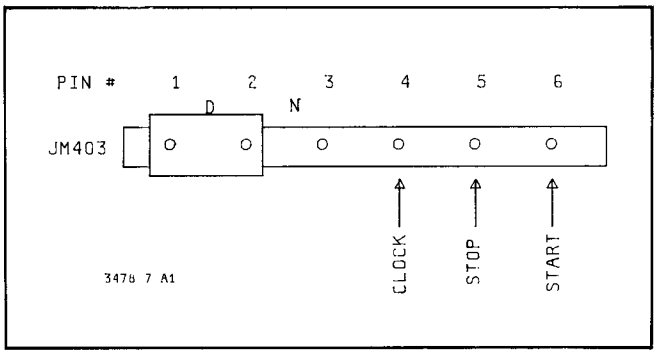

Figure 7-B-1. JM403 SA Connection

SERVICE GROUP C
OHMS TROUBLESHOOTING

Service Group C Contents

Title	Paragraph
Introduction	7-C-1
2-Wire and 4-Wire Ohms Troubleshooting	7-C-4
Overload Readings on All Ranges	7-C-6
Inaccurate Readings on All or Some Ranges	7-C-8
Constant Zero Reading on All Ranges	7-C-10
Noise on All Ranges	7-C-12
Floating Readings on All or Some Ranges	7-C-14
Overload, Noise, or Constant Zero Readings on Some Ranges	7-C-16
Ohms Protection Circuitry Troubleshooting	7-C-18
Ohms Current Source Troubleshooting	7-C-20
4-Wire Ohms Troubleshooting	7-C-22
Checking the A/D Controller	7-C-24

7-C-1. INTRODUCTION

7-C-2. This Service Group has the Ohms troubleshooting information for the 3478A and is symptoms oriented (i.e., what fails). Unless otherwise specified, refer to Schematic 1 when using the troubleshooting procedures.

7-C-3. Most ohms failures will show up in both the 2-Wire and 4-Wire Ohms Function with the troubleshooting procedure given in paragraph 7-C-4. If a failure shows up in only the 4-Wire Ohms Function, go to paragraph 7-C-22 for troubleshooting.

CAUTION

The instrument contains CMOS Integrated Circuits (e.g. U102) which are extremely susceptible to failures due to static discharge. It is especially important that grounded tools and wrist straps be used when handling or troubleshooting these components.

7-C-4. 2-WIRE AND 4-WIRE OHMS TROUBLESHOOTING

7-C-5. An Ohms Failure can be Overload, Inaccurate, Constant Zero, Floating, or Noisy Readings on some or all ranges. A failure should show up with an appropriate input applied to the 3478A. For example, an overload failure on the 3K ohm Range should show up with a 3K ohm resistor applied to the input. The following paragraphs have the ohms failures and the troubleshooting procedures (go to paragraph 7-32 for a description of the failures).

7-C-6. Overload Readings on All Ranges

7-C-7. An Overload is normally caused by a high ohms current (or an open between the INPUT Terminals and the Input Circuitry). Make sure the DC Volts Function is operating correctly, before troubleshooting for an ohms failure. Do the following procedure.

a. Set the 3478A to the 2-Wire Ohms Function and the 3K ohm Range.

b. Connect a 3K ohm Resistor to the 3478A's INPUT Terminals.

c. Using a high impedance Digital Voltmeter (like the 3456A), measure the voltage between pin 17 and pin 19 of U102. Connect the low input of the voltmeter to pin 17 and the high input to pin 19.

d. If the reading on the test voltmeter is +4V dc and the 3478A displays an overload, the Range Resistors in U102 may be too low. Replace U102.

e. If the reading is other than +4V dc, the Ohms Current Source is defective. Go to paragraph 7-C-20 for troubleshooting.

7-C-8. Inaccurate Readings on All or Some Ranges

7-C-9. This failure is normally caused when the ohms current changes value due to a load change. Do the following procedure.

a. Set the 3478A to the 2-Wire Ohms Function and the 3K ohm Range.

b. Connect a 3K ohm Resistor to the 3478A's INPUT Terminals.

c. Using a high impedance Digital Voltmeter (like the 3456A), measure the voltage across R205. Since the ohms current on the 3K ohm Range is 1mA, the voltage should be approximately .47V dc.

d. If the voltage is radically wrong, the ohms current is incorrect. Use the overload troubleshooting procedure (in paragraph 7-C-6) to determine the faulty circuitry.

e. If the voltage is good, remove the 3K ohm Resistor from the INPUT Terminals. Then short the INPUT Terminals.

f. If the voltage across R205 changes, the Output PMOS FET in U102 may be defective. Replace U102.

g. If the voltage remains the same, the failure is most likely in the Ohms Protection Circuitry. Make sure Q201 through Q204 are good.

7-C-10. Constant Zero Reading on All Ranges

7-C-11. A Constant Zero Reading is normally caused when the Ohms Current Source supplies no ohms current (current at zero value). Since no current goes through the resistor to be measured, no voltage drop across the resistor is developed and the 3478A measures zero volts (zero reading). A no-current condition can be caused by an open circuit between the Ohms Current Source and the INPUT Terminals, or by a defective Current Source. Do the following procedure.

a. Set the 3478A to the 2-Wire Ohms Function and the 3K ohm Range.

b. Connect a 3K ohm Resistor to the 3478A's INPUT Terminals.

c. Using a clip lead, connect pin 15 of U102 to the 3478A's HI INPUT Terminal.

d. If the 3478A still shows a constant zero reading, the Ohms Current Source is inoperative. Go to paragraph 7-C-20 for troubleshooting.

e. If the Ohms Function is now operating correctly, do the following:

1. Disconnect the clip lead from pin 15 of U102 and connect it to the collector of Q204 (junction of Q204, R203, and cathode of CR201). Leave the other end of the clip lead connected to the input terminal for the checks that follow.

2. If the Ohms Function is now operating, check for an open R205 or an open in Q201 through Q204.

3. If the Constant Zero Reading is still displayed, disconnect the clip lead from Q204 and connect it to the anode of CR201.

4. If the Ohms Function is now operating, check for an open CR201.

5. If the Constant Zero Reading is still displayed, check for an open K103. Make sure K103 is energized (+5V across the relay coil), before replacing the relay. If the relay is not energized, U102 may be defective. Before replacing U102, make sure the A/D Controller (U462) is good. Go to paragraph 7-C-24 for the SA procedure to check U462.

7-C-12. Noise on All Ranges

7-C-13. Noise on all ranges is normally caused by a noisy ohms current. Do the following procedure.

a. Set the 3478A to the 2-Wire Ohms Function and the 3K ohm Range.

b. Connect a 3K ohm Resistor to the 3478A's INPUT Terminals.

c. Using a clip lead, connect pin 15 of U102 to the 3478A's HI INPUT Terminal.

d. If the Ohms Function is quiet, noise is caused by the Ohms Protection Circuitry. Check Q201 through Q204.

e. If the Ohms Function is still noisy, do the following checks .

1. Using a high impedance Digital Voltmeter (like the 3456A), make sure the voltage at U201 pin 6 is a quiet +8V (<10μV change). Replace U201, if noisy. If the voltage is still noisy, try U102.

2. If the voltage at U201 pin 6 is good, measure for a quiet +12V at U202 pin 6 (<10μV change). Replace U202, if noisy. If the voltage is still noisy, replace U102.

3. If the voltage at U202 pin 6 is good, replace U203. If the ohms function is still noisy, replace U102.

7-C-14. Floating Reading on All or Some Ranges

7-C-15. A Floating Reading is normally caused by an open circuit between the INPUT Terminals and the DC/Ohms Input Amplifier. Make sure the DC Volts Function is operating correctly, before suspecting an ohms failure. If the failure shows up in the Ohms Function only, U102 may be defective. Before replacing U102, make sure the A/D Controller (U462) is good. Go to paragraph 7-C-24 to check U462.

7-C-16. Overload, Noise, or Constant Zero Readings on Some Ranges

7-C-17. Failures on some ranges can only be caused by the Input Hybrid U102. This is because the hybrid is used to configure the current source for the different ranges. If at least one range is good, the Ohms Current Source is operating. Before replacing U102, make sure it receives the correct information from the A/D Controller (U462). Go to paragraph 7-C-24 to check U462.

7-C-18. OHMS PROTECTION CIRCUITRY TROUBLESHOOTING

7-C-19. The Ohms Protection Circuitry is used to protect the Ohms Current Source from excessive positive or negative input voltages. To make sure the circuitry is operational, check the following:

a. To check the circuitry operation for positive input voltages, do the following:

1. Set the 3478A to the 2-Wire Ohms Function and the 3K ohm Range.

2. Connect a high impedance Digital Voltmeter (like the 3456A) across R205.

3. Acquire a variable 0-10V power supply. Set the supply for a 0V output and connect it to the 3478A's INPUT Terminals.

4. Measure for approximately .47V dc across R205. If the voltage is wrong, the Current Source may be defective (go to paragraph 7-C-20 for troubleshooting).

5. While monitoring the voltage across R205, adjust the power supply until it outputs +10V. At an output voltage of approximately +6V, the voltage across R205 should go to 0V and remain at that level.

6. If the voltage does not go to 0V, replace CR201.

7. If the voltage does go to 0V, the Ohms Protection Circuitry does protect for positive input voltages.

b. To check the circuitry operation for negative input voltages, do the following:

1. Leave the same set up as in step a, except bring the variable power supply down to 0V. The voltage across R205 should again be .47V.

2. Reverse the power supply output leads and apply -10V dc to the 3478A's INPUT Terminals.

3. The voltage across R205 should remain at .47V.

4. If the voltage remains the same (.47V), the Ohms Protection Circuitry is operating correctly.

5. If the voltage changes value and/or polarity, the Ohms Protection Circuitry is inoperative. Measure for approximately -.6V at the source and drain of Q205. If the voltage is high or zero, replace Q205. If the voltage is good, check for a defective Q201 through Q204.

7-C-20. OHMS CURRENT SOURCE TROUBLESHOOTING

7-C-21. The Ohms Current Source consists of a Voltage Reference, Buffer and Range Resistors, and a Gate Bias Amplifier. Before troubleshooting the current source, make sure the +10V reference is good at JM201. To troubleshoot the Ohms Current Source, do the following procedure.

a. Set the 3478A to the 2-Wire Ohms Function and the 3K ohm Range.

b. Using a high impedance Digital Voltmeter (like the 3456A), measure the voltage at pin 2 and pin 3 of U203 (U102 pins 17 and 18, respectively). Make sure the voltage on both pins is approximately +8V.

c. If the voltages are not approximately the same, replace U203.

d. If the voltages on both pins are wrong (other than +8V), but are approximately the same, do the following:

1. Measure for approximately +12V at pin 6 of U201.

2. If the voltage at pin 6 of U201 is +12V, replace U102. Before replacing U102, make sure the A/D Controller (U462) is good. Go to paragraph 7-C-24 to check U462.

3. If the voltage at pin 6 of U201 is other than +12V, measure for approximately +8V at pin 3 of U201.

4. If the voltage at pin 3 of U201 is wrong, replace U102. Before replacing U102, make sure

the A/D Controller (U462) is good. Go to paragraph 7-C-24 to check U462.

5. If the voltage is good, connect pin 6 to pin 3 of U201 (U102 pin 6 to pin 7).

6. Measure for approximately +8V at pin 6 of U201.

7. If the voltage at pin 6 of U201 is +8V, replace U102. Before replacing U102, make sure the A/D Controller (U462) is good. Go to paragraph 7-C-24 to check U462.

8. If the voltage is other than +8V, replace U201.

e. If the voltages on both pins of U203 are approximately +8V, do the following:

1. Measure for approximately +12V at pin 6 of U202.

2. If the voltage is wrong, connect pin 6 to pin 3 of U202.

3. If the voltage is now good, replace U102. Before replacing U102, make sure the A/D Controller (U462) is good. Go to paragraph 7-C-24 to check U462.

4. If the voltage is still wrong, replace U202.

f. If the Ohms Current Source is still inoperative, replace U203 and then U102.

7-C-22. 4-WIRE OHMS TROUBLESHOOTING

7-C-23. The only difference between the two ohms functions is that the 4-Wire Ohms Function uses the Ohms SENSE Terminals and a different input path in U102. Make sure the Front/Rear Switch is good and that the wires from the terminals are connected correctly. Also, make sure the lead resistance of the test used in the 4-Wire Ohms Function is not excessive (<1/30 of full scale reading in the LO INPUT lead and <1/3 of full scale in the HI INPUT lead). If everything appears to be good, U102 may be defective. Before replacing U102, make sure the A/D Controller (U462) is good. Go to paragraph 7-C-24 to check U462.

7-C-24. CHECKING THE A/D CONTROLLER (U462)

7-C-25. Do the following to check the A/D Controller. Refer to Schematic 3.

a. Turn the 3478A off.

b. Move jumpers JM502, JM503, and JM403 to the "D" position (JM403 pin 1 and 2), as shown in Figure 7-C-1.

c. Obtain a Signature Analyzer. Set and connect as follows (shown in Figure 7-C-1):

Start:	TP401 (JM403 pin 6) (⁄)
Stop:	TP402 (JM403 pin 5) (\ )
Clock:	TP403 (JM403 pin 4) (⁄)
Hold:	Out
Self-Test:	Out
Gnd:	Ground Pin (next to C203)

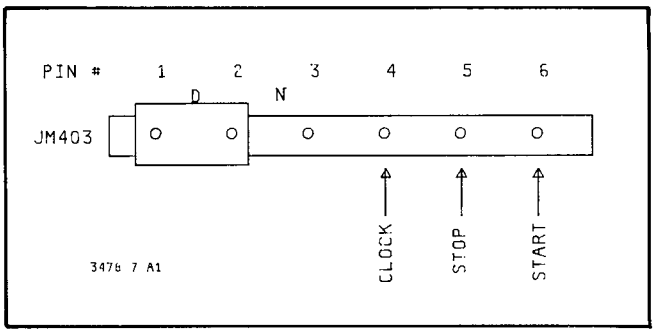

Figure 7-C-1. JM403 SA Connection

d. Turn the 3478A on and check the following signatures:

U462 pin 32: 7ACA
U462 pin 33: 20F0
U462 pin 34: 666H

e. If any signatures are wrong, go to Service Group D (Flowchart D) for troubleshooting.

f. If the signatures are good, the Input Hybrid is defective.

SERVICE GROUP D
A/D CONVERTER AND LOGIC TROUBLESHOOTING

Service Group D Contents

Title	Paragraph
Introduction	7-D-1
Chassis Common Logic Troubleshooting and Failures	7-D-5
Pre-Troubleshooting Information	7-D-7
Turn-On Failure	7-D-9
Inoperative Display	7-D-13
Inoperative Keyboard	7-D-15
HP-IB Failure	7-D-17
U.C. ROM Fails	7-D-19
U.C. RAM Fails	7-D-21
Calibration RAM Failure	7-D-23
Voltmeter Complete	7-D-25
Address Switch Failure	7-D-27
External Trigger	7-D-29
Floating Common Logic Failures	7-D-31
Pre-Troubleshooting Information	7-D-33
A/D Converter Failures and Troubleshooting	7-D-35
Input Hybrid (U102) Inoperative	7-D-40
A/D Controller Troubleshooting	7-D-42
Isolation Circuitry Troubleshooting	7-D-44

7-D-1. INTRODUCTION

7-D-2. This Service Group has the A/D Converter and Logic Circuitry troubleshooting information for the 3478A. Unless otherwise specified, refer to Schematic 1 when using the troubleshooting procedures.

7-D-3. The 3478A Logic Circuitry can be separated into two major circuitry: Chassis Common Logic Circuitry and Floating Common Logic Circuitry. The Chassis Common Logic Circuitry consists of the Main Controller (U501), Program ROM (U502), Calibration RAM (CMOS RAM, U512), HP-IB Chip (U503), Display, Keyboard, and associated circuitry. Its purpose is to control the operation of the instrument. The Floating Common Logic Circuitry consists of an A/D Controller (U462), A/D Converter (U403, U401, etc.), and associated circuitry. Its purpose is to control the A/D conversion, and to control the Input Hybrid. Communications between the circuitry are done by the Isolation Circuitry.

7-D-4. Most of the procedures in this Service Group require a Signature Analyzer for troubleshooting. In addition to it, a logic probe and a logic pulser are also required for some troubleshooting procedures. Obtain the required equipment, before going to the procedures.

CAUTION

The instrument contains CMOS Integrated Circuits which are extremely susceptible to failures due to static discharge. It is especially important that grounded tools and wrist straps be used when handling or troubleshooting these components.

7-D-5. CHASSIS COMMON LOGIC TROUBLESHOOTING AND FAILURES

7-D-6. The following paragraphs have the Chassis Common Logic Failures and Troubleshooting.

7-D-7. Pre-Troubleshooting Information

7-D-8. Before troubleshooting the Chassis Common Logic Circuitry, check and do the following:

a. Check the +5V Power Supply and make sure it is good. The supply should be between +4.9V and +5.1V. If the supply is inoperative, go to Service Group E for troubleshooting.

b. Make sure the ALE line at U501 pin 11 is good, as shown in Figure 7-D-1. If the signal is missing or wrong,

make sure the CPU's clock (at pin 2 and 3 of U501) is at approximately 5.856MHz. Try replacing crystal Y501 and if the signal is still missing, try U501.

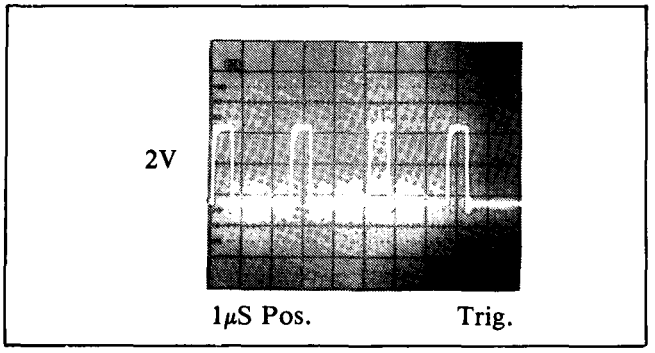

Figure 7-D-1. U501 ALE Signal

c. Make sure the $\overline{\text{RESET}}$ line at pin 4 of U501 is high. If the line is low, try replacing U550 (see Schematic 4).

7-D-9. Turn-On Failure

7-D-10. The Turn-On Failure normally shows up if all of the following symptoms are noted. If only one symptom is noted, it is not a turn-on failure. The symptoms for a turn-on failure are as follows:

a. The display is dead or inoperative. Since this can also be caused by a defective display, assume it is turn-on failure before troubleshooting the display.

b. The keyboard is inoperative (does not respond). If only the keyboard is inoperative, go to paragraph 7-D-15 for troubleshooting.

c. HP-IB is inoperative. It may not be necessary to check for an HP-IB failure if the two previous symptoms were are noted. If only an HP-IB failure is noted, go to paragraph 7-D-17 for troubleshooting.

7-D-11. If the previous symptoms were noted, go to Flowchart A for troubleshooting. In the flowchart, the various address lines and data lines are checked, using Signature Analysis, to determine the faulty component. The faulty component(s) can be the Main Controller (U501), Program ROM (U502), CMOS RAM (U512), or the HP-IB Chip (U503).

7-D-12. Before troubleshooting for a Turn-On Failure, check the following:

a. Make sure the Data Bus Break RP527 is making good contact. If the pins are bent, the signatures on the Data Lines may be good, but the 3478A may be inoperative.

b. Make sure jumpers JM501, JM502, and JM503 are in the "N" (Normal) position. The 3478A will not turn on at all or properly, if they are in a different position.

7-D-13. Inoperative Display

7-D-14. An inoperative display is when all or part of the display is inoperative. The failure can be caused by the display itself or part of the Chassis Common Circuitry. Before doing any troubleshooting, make sure the 1.1V, 2.2V, and 3.3V power supplies to the display are good. The supplies can be checked at R503 pins 9, 3, and 15 for the 3.3V, 2.2V, and 1.1V power supplies, respectively. If any supply is wrong, replace R503 and if still wrong, replace the display. If the supplies are good, go to Flowchart B for troubleshooting. In the flowchart, the control lines to the display are checked, using Signature Analysis routines, to determine if the display or another circuit is at fault.

CAUTION

Make sure grounded tools and wrist straps are used, when replacing or checking the display.

7-D-15. Inoperative Keyboard

7-D-16. An inoperative keyboard is when all or part of 3478a operations cannot be selected from the keyboard. This can be caused by the keyboard itself or by the Main Controller. The following procedure checks the ports of the Main controller (using Signature Analysis) that receive the information from the keyboard. From the resultant signatures it is determined if the keyboard or the Main Controller is defective. Do the following:

a. Turn the 3478A off.

b. Move jumpers JM502 and JM503 to the "D" position.

c. Connect and set the Signature Analyzer as follows:

Start:	TP7 (⌝)
Stop:	TP8 (⌝)
Clock:	TP3 (⌟)
Hold:	Out
Self-Test:	Out
Gnd:	Chassis Ground

d. Turn the 3478A on and check the following signatures.

U501 pin 27: P6H5
U501 pin 28: PF57
U501 pin 29: 08C6
U501 pin 30: 41PA
U501 pin 31: 35PU
U501 pin 32: 62U5
U501 pin 33: 27H3
U501 pin 34: 6U19

NOTE

The 3478A can have either a Revision B (part number 1818-1752B) Program ROM (U502) or a Revision C (part number: 1818-1752C) Program ROM which make some of the signatures in the flowchart different. If two sets of signatures are listed in the flowchart, use the signatures shown in parentheses for Revision B ROMs and the others for Revision C ROMs. If no signatures in parenthesis are given, the signatures apply to both ROMs.

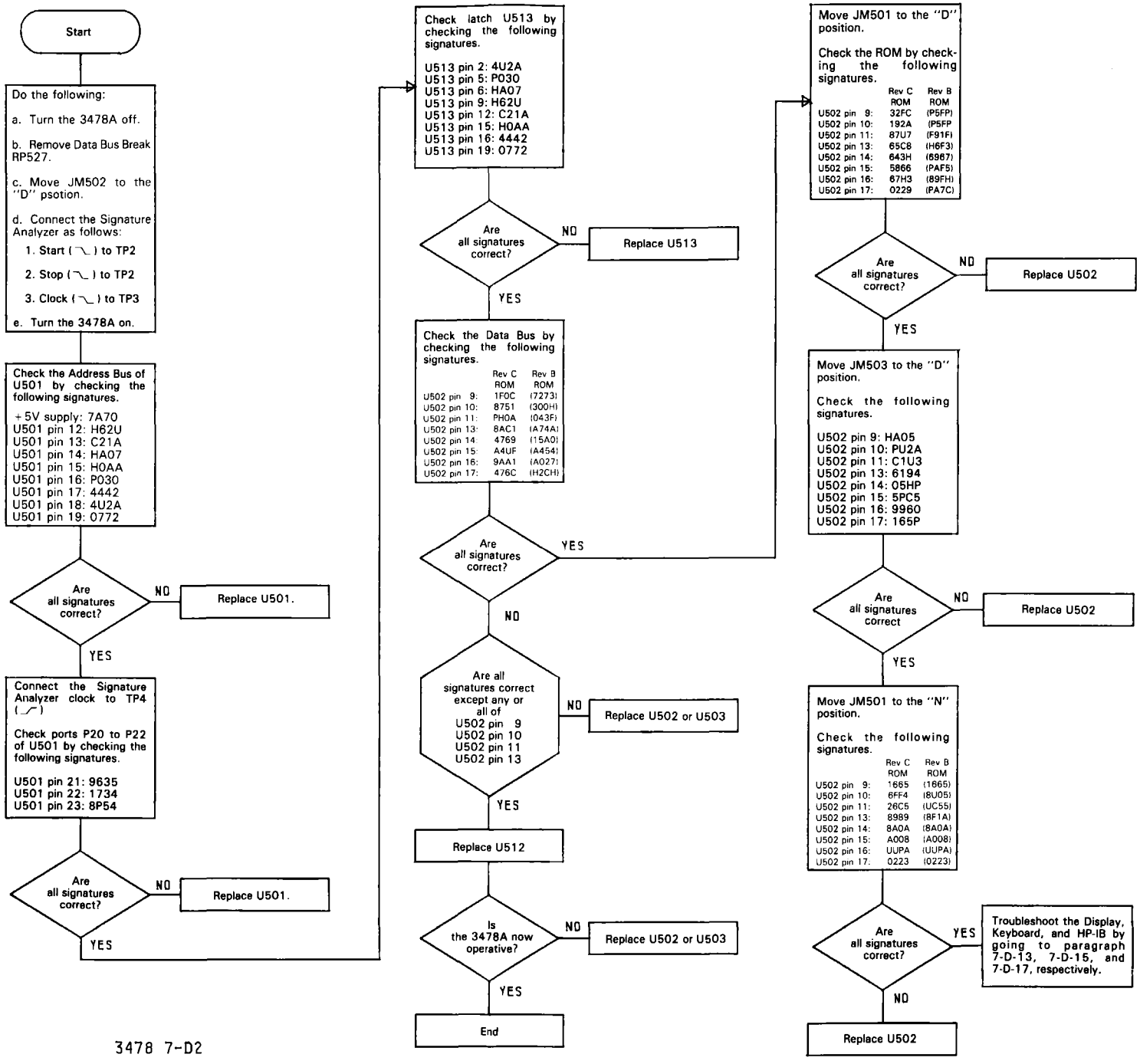

3478 7-D2

Figure 7-D-2. Flowchart A

e. If any signatures are incorrect, U501 may be at fault. Replace U501. If all signatures are correct, the keyboard or keyboard connector may be defective. The keyboard can be checked by doing the following:

1. Leave the Signature Analyzer connected as in step c.

2. By pressing a certain front panel button, the signature on a port of U501 should change. For example, the signature on U501 pin 27 (port P10) should change from "P6H5" to "U878", if the A button is pressed. From this change, it can be determined if the button (i.e., part of the keyboard) is inoperative or good. The following lists the pin numbers of U501, the button to be pressed, and the change in signature.

U501 pin#	Press Button	Change Signature From	To
27	⎓ A	P6H5	U878
27	SGL/TRIG	P6H5	2F5U
28	~ V	PF57	A998
28	⇧	PF57	4132
29	Shift	08C6	PUF4
30	4 WIRE	41PA	AHUA
30	INT/TRIG	41PA	CF39
31	~ A	35PU	1C44
32	⎓ V	62U5	2113
32	2 WIRE	62U5	2718
33	AUTO/MAN	27H3	9F9A
33	⇩	27H3	24HU
34	SRQ	6U19	4F39
34	LOCAL	6U19	H083

7-D-17. HP-IB Failure

7-D-18. Before troubleshooting for an inoperative HP-IB, make sure the 3478A is operating correctly from the front panel. Repair the front panel operation first, before troubleshooting for an HP-IB failure. To troubleshoot an HP-IB failure, go to Flowchart C. The procedure in the flowchart checks the HP-IB Chip to determine if data can be written to or read by the chip.

7-D-19. U.C. ROM Fails

7-D-20. If the "U.C. ROM FAIL" message is displayed (during a Self-Test routine), the most likely cause is a failure in Program ROM (U502). To make sure the ROM is defective and not the Main Controller, go to Flowchart A (see paragraph 7-D-11) for troubleshooting.

7-D-21. U.C. RAM Fails

7-D-22. If the "U.C. RAM FAIL" message is displayed, the failure is most likely in the Chassis Common CPU's RAM (RAM in Main Controller U501). To make sure the RAM is defective, go to Flowchart A (see paragraph 7-D-11) for troubleshooting.

7-D-23. Calibration RAM Failure

7-D-24. If the "CAL RAM FAIL" message is displayed (after a Self-Test routine), the most likely cause is a Calibration RAM (CMOS RAM, U512) Failure. The RAM can be checked by sending data to the RAM and reading it back.

CAUTION

Make sure grounded tools and wrist straps are used, when replacing or checking the display.

CAUTION

The test in paragraph 7-D-24 cannot be made without destroying the present data in the Calibration RAM. The 3478A must be recalibrated, after doing the test.

a. Turn the 3478A off.

b. Move jumpers JM502 and JM503 to the "D" position.

c. Connect and set the Signature Analyzer as follows:

Start: TP8 (⎍)
Stop: TP7 (⎏)
Clock: TP6 (⎍)
Hold: Out
Self-Test: Out
Gnd: Chassis Ground

d. Turn the 3478A on and check the following signatures.

U512 pin 9: H709
U512 pin 11: C577
U512 pin 13: 4296
U512 pin 15: 8U25

e. If any signatures are wrong, something on the Data Bus is defective. Go to Flowchart A (see paragraph 7-D-11) for troubleshooting.

f. If the signatures are good, the RAM (U512) may be defective. The RAM can be checked by continuing with the test in the next step.

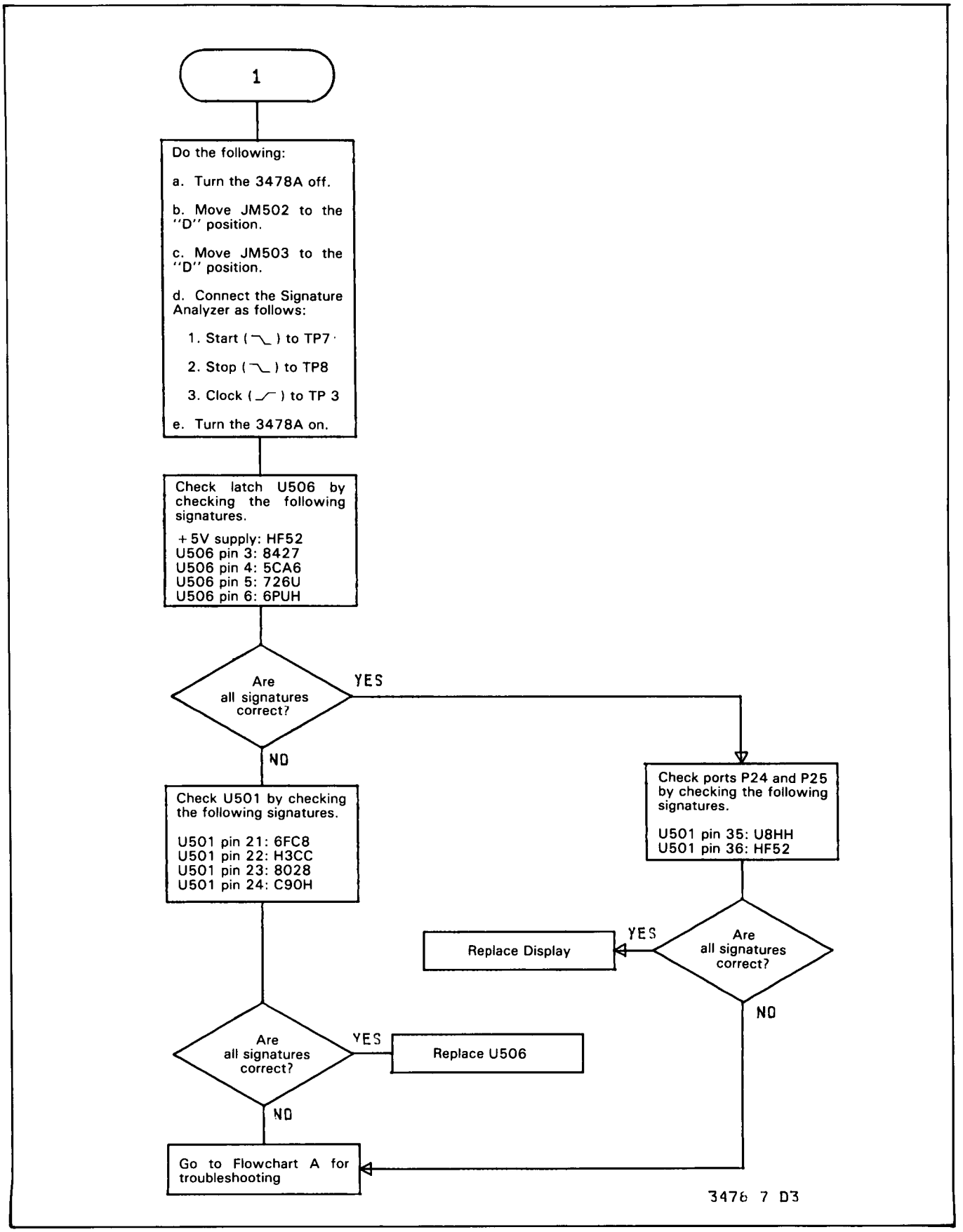

Figure 7-D-3. Flowchart B

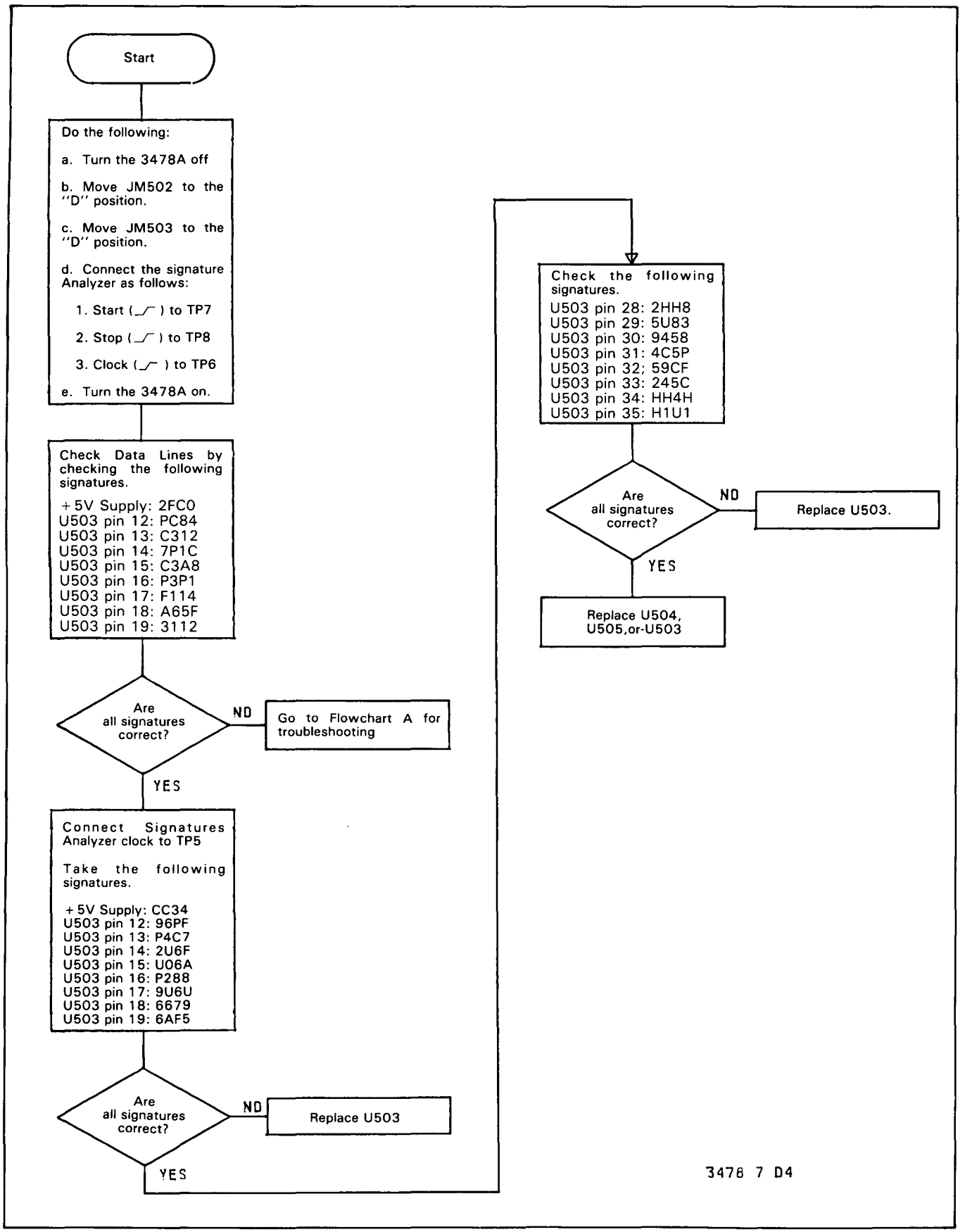

Figure 7-D-4. Flowchart C

g. The RAM can be checked by reading data back from it. One caution when checking the RAM, the data in the RAM will be lost and the 3478A will need to be recalibrated. Do the following:

1. To check the RAM, leave the Start and Stop inputs of the Signature Analyzer connected as in step c, but connect the Clock to TP5 (⎍).

2. Using a flat blade screwdriver, set the front panel CAL ENABLE Switch to the calibration enable position (the slot of the switch is in the vertical position, as shown on the front panel).

3. Take the following signatures.

U512 pin 9: H709
U512 pin 11: C577
U512 pin 13: 4296
U512 pin 15: 8U25

4. If the signatures are wrong, the RAM may be defective. Before replacing the RAM, make sure the RAM's R/W line reads a signature of 4296. If the signature is wrong, replace U515. If the signature is good, replace U512.

5. If the signatures are good, other circuitry may cause the failure. Go to Flowchart A (see paragraph 7-D-11) for further troubleshooting.

7-D-25. Voltmeter Complete

7-D-26. The Voltmeter Complete pulse is normally output after an input measurement is completed. To troubleshoot the operation, with a logic probe, check and make sure pin 25 of U501 is toggling. If the probe does not show toggling, U501 is most likely defective. If the probe shows toggling, make sure R538 is not open, and CR504 and CR505 are not shorted. If the resistor and diodes are good, replace U508.

7-D-27. Address Switch Failure

7-D-28. An address switch failure can be caused by the switch itself or U510. The address switch can easily be checked using a logic probe. With all switches of the address switch on (up), pins 9, 10, 11, 12, 13, 14, 15, and 16 of the switch are low. With all switches off (down), the pins are high. If the switch is good, replace U510.

7-D-29. External Trigger

7-D-30. An external trigger failure can be caused by a defective U514 or HP-IB Chip. Do the following:

a. Set the 3478A to the Single Trigger mode.

b. Using a logic probe, make sure pin 5 of U514 is high. If the pin is low, do the following:

1. Check for a low at pin 4 of U514.

2. If pin 4 of U514 is low, replace U514.

3. If pin 4 of U514 is high, replace U503.

c. If pin 5 of U514 is high, using a logic pulser, pulse (i.e., toggle) pin 5.

d. Using a logic probe, check for a high at pin 9 of U514.

e. If pin 9 is low, replace U514. If the pin is high, while checking the pin with a logic probe, apply a trigger pulse to the 3478A's EX TRIG connector (i.e., short the input of the connector to ground). When the 3478A is triggered, pin 9 of U514 should toggle high and then low.

f. If pin 9 does not toggle, replace U514. If it does toggle, U501 may be defective.

7-D-31. FLOATING COMMON LOGIC FAILURES

7-D-32. Floating Common Failures can be failures in the A/D Converter and the A/D Controller. The following paragraphs have the failures and troubleshooting information.

7-D-33. Pre-Troubleshooting Information

7-D-34. Before troubleshooting the Floating Common Logic Circuitry and A/D Converter, perform the following:

a. Check the 3478A's Floating Common Power Supplies. Make sure they are stable, are at the correct leve and are not oscillating. The power supplies are a follows:

Power Supply	Checked at	Voltage level
+ 5V	JM701	+ 4.9V to + 5.1V
− 15V	JM702	− 14.4V to − 15.6V
+ 15V	JM703	+ 14.4V to + 15.6V

b. Check and make sure the Reference Supplies are at the correct level and are quiet. The + 10V suppply can be checked at U405 pin 6, the -10V supply at U404 pin 6, and the buffered + 10V supply at JM201.

c. Make sure the ALE line at TP403 (U462 pin 11) is good, as shown in Figure 7-D-5. If the signal is missing or incorrect, make sure the CPU's clock (at pin 2 and 3 of U462) is at 10.98MHz. Try replacing crystal Y460, if the signal is missing. If still missing, replace U462.

7-D-35. A/D Converter Failures and Troubleshooting

7-D-36. An A/D Converter failure can show up as Overload, Constant Zero, Floating, or Noisy Readings.

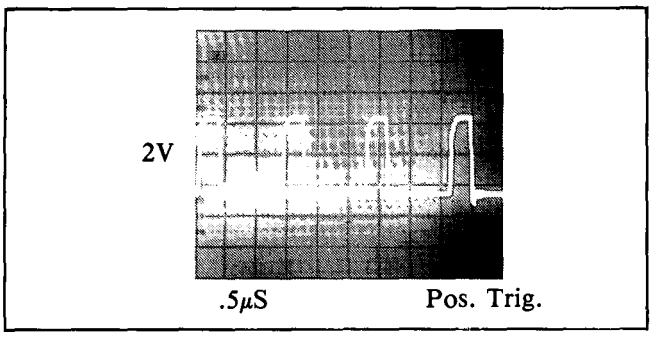

Figure 7-D-5. U462 ALE Signal

Other failures are normally noted when, after doing a Self-Test, the 3478A display's either "A:D SLOPE ERR" or "A:D TEST FAIL". If an "A:D LINK FAIL" is displayed, the failure is most likely in the Isolation Circuitry (go to paragraph 7-D-44 for troubleshooting). The following paragraphs have the failures and troubleshooting information for the A/D Converter.

7-D-37. Overload, Constant Zero, Floating, or Noisy Readings. Before troubleshooting the A/D Converter for these failures, make sure the failures are not caused by the 3478A's Input Circuitry. Do the procedure which follows this paragraph (the same procedure is also in Service Group A). If the procedure has been performed already, ignore the procedure and go to Flowchart D for troubleshooting. If it has not been performed, do the following:

a. Set the 3478A to the DC Volts Function and 3V Range.

b. Turn Autozero off by pressing the blue Shift button and then the INT/TRIG (AUTOZERO) button.

c. Apply a stable +3V dc to the INPUT Terminals.

d. With a Digital Voltmeter (like the 3456A) measure for +10V at JM101.

e. If the reading on the test voltmeter is a stable +10V, the A/D Converter is at fault. Go to Flowchart D for troubleshooting. If the reading is other than +10V, go to Service Group A for troubleshooting.

7-D-38. A/D Slope Error. When an "A:D SLOPE ERR" is displayed on the 3478A, the most likely cause is the A/D Converter (U403 and associated circuitry) or the A/D Controller (U462). Go to Flowchart D for troubleshooting. The procedure in the flowchart checks the different ports (using Signature Analysis) of the A/D Controller (U462) and also checks the DAC (U465).

7-D-39. A/D Test Fails. If the message "A:D TEST FAIL" is displayed, the A/D Converter fails its internal test. Since this can be caused by the A/D Controller (U403 and associated circuitry) or the A/D Controller (U462), go to Flowchart D for troubleshooting. The procedure in the flowchart checks the different ports (using Signature Analysis) of the A/D Controller and also checks the DAC (U465).

7-D-40. Input Hybrid (U102) Inoperative

7-D-41. An inoperative Input Hybrid can be caused by the hybrid itself or when it receives wrong information from the A/D Controller. To isolate the circuitry, do the following:

a. Turn the 3478A off.

b. Move jumpers JM502, JM503, and JM403 to the "D" position (JM403 pin 1 and 2), as shown in Figure 7-D-7.

c. Obtain a Signature Analyzer. Set and connect as follows (shown in Figure 7-D-7):

Start:	TP401 (JM403 pin 6) (⎍)
Stop:	TP402 (JM403 pin 5) (⎏)
Clock:	TP403 (JM403 pin 4) (⎍)
Hold:	Out
Self-Test:	Out
Gnd:	Ground Pin (next to C203)

d. Turn the 3478A on and check for the following signatures:

U462 pin 32: 7ACA
U462 pin 33: 20F0
U462 pin 34: 666H

e. If any signatures are wrong, U462 may be defective. Go to Flowchart D for troubleshooting.

f. If the signatures are good, the Input Hybrid is defective.

7-D-42. A/D Controller Troubleshooting

7-D-43. Do the following to check the A/D Controller (U462).

a. Using a logic probe, check and make sure the $\overline{\text{RESET}}$ line (U462 pin 4) is high.

b. If the $\overline{\text{RESET}}$ line is low, do the following:

1. Make sure pin 1 of U462 is toggling.

2. If pin 1 is not toggling, the Isolation Circuitry may be at fault. Go to paragraph 7-D-44 for troubleshooting.

3. If pin 1 is toggling, check for a low at U466 pin 3.

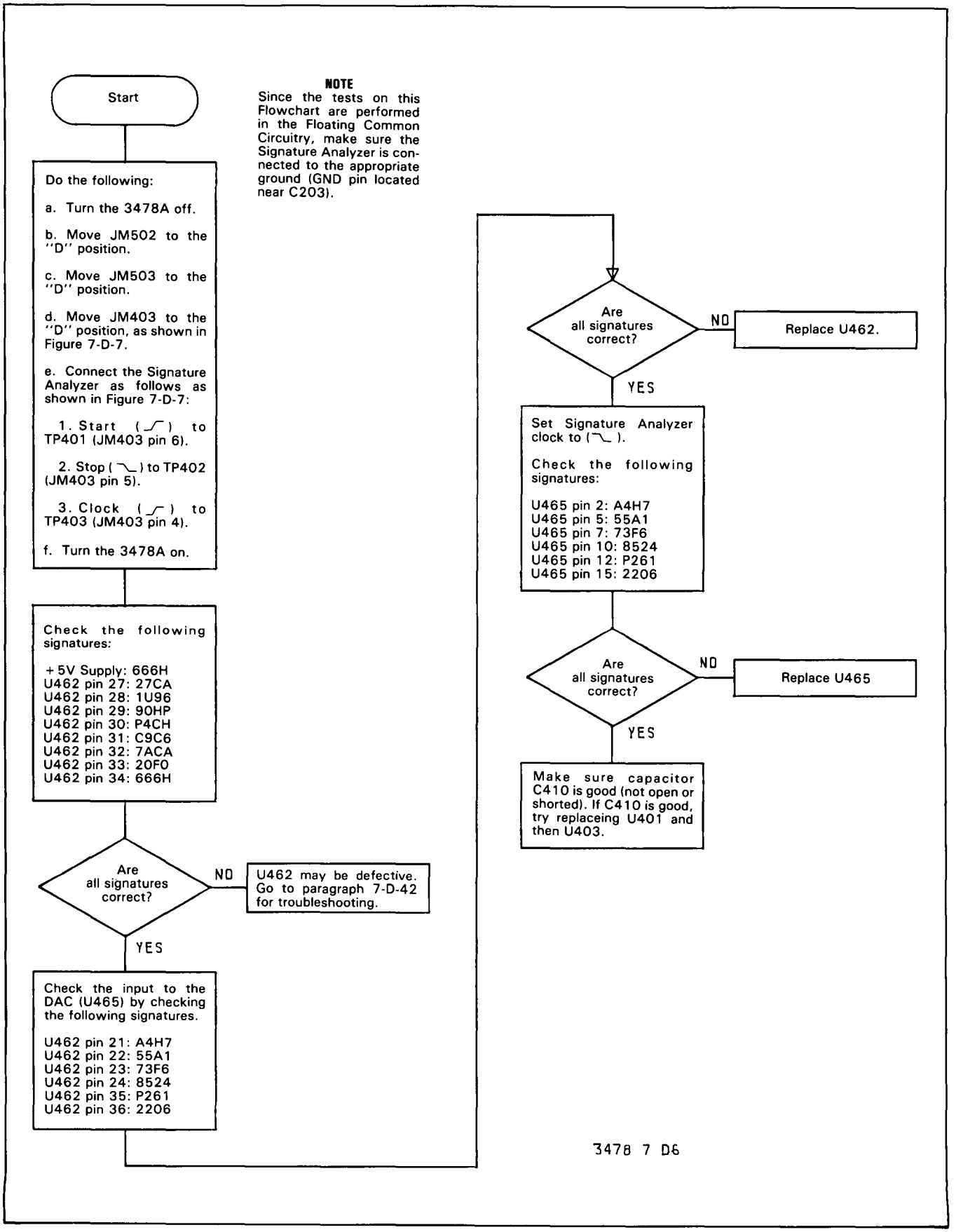

Figure 7-D-6. Flowchart D

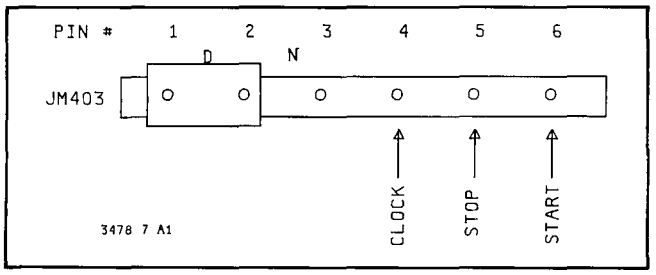

Figure 7-D-7. JM403 SA Connection

4. If pin 3 of U466 is high, replace U466. If low, replace U467.

c. If the $\overline{\text{RESET}}$ line is high, while monitoring the line, press the 3478A's blue Shift button and then the SGL/TRIG (TEST/RESET) button. The 3478A should go through its Self-Test routine, and when the routine is finished, the $\overline{\text{RESET}}$ line toggles from high to low to high.

d. If the $\overline{\text{RESET}}$ line toggles and the 3478A is still inoperative, replace U462.

e. If the $\overline{\text{RESET}}$ line does not toggle, do the following:

1. Make sure pin 1 of U467 is toggling.

2. If pin 1 is not toggling, the Isolation Circuitry may be at fault. Go to paragraph 7-D-44 for troubleshooting.

3. If pin 1 is toggling, replace U466 and then U467.

7-D-44. ISOLATION CIRCUITRY TROUBLESHOOTING

7-D-45. The Isolation Circuitry transfers information from the Main Controller (U501) to the A/D Controller (U462) and also from the A/D Controller to the Main Controller. A failure in the logic is normally indicated when, after doing a Self-Test, "A:D LINK FAIL" is displayed. To troubleshoot the circuitry, first determine the inoperative circuitry and then troubleshoot the circuitry. Do the following:

a. Turn the 3478A off.

b. Move jumpers JM502 and JM503 to the "D" position.

c. Connect the Floating Common ground to the 3478A's chassis. The LO INPUT terminal can be used as a Floating Common ground (make sure the correct terminal is used, dependent on the position of the Front/Rear Switch).

d. Connect and set the Signature Analyzer as follows:

Start:	U462 pin 1 (¯_)
Stop:	TP8 (¯_)
Clock:	TP3 (_/¯)
Hold:	Out
Self-Test:	Out
Gnd:	Chassis Ground

e. Turn the 3478A on and check the signature of the Chassis Common +5V power supply.

f. If the signature is different than "HF52" and the SA probe is toggling, the Main Controller (U501) may be defective. Go to Flowchart A for troubleshooting (see paragraph 7-D-11).

g. If the SA probe is not toggling (the signature can be the same or different), the isolation circuitry is defective. Do the following:

1. Using a logic probe, make sure pins 2 and 4 of U508 are toggling.

2. If the pins are not toggling, replace U508.

3. If they are toggling, check for a defective transformer T501 and associated circuitry. If T501 is good, replace U468.

h. If the signals at pin 38 of U501 and pin 14 of U462 are good, the isolation logic used to transfer information between U462 and U501 may be defective. Do the following:

1. Using a logic probe, make sure pin 38 of U462 is toggling.

2. If pin 38 is not toggling, U462 may be defective. Go to Flowchart D for troubleshooting.

3. If pin 38 is toggling, make sure pin 1 and 4 of U467 are toggling.

4. If the pins are not toggling, replace U467.

5. If they are toggling, check for a defective transformer T401 and associated circuitry. If T401 is good, replace U550.

SERVICE GROUP E
POWER SUPPLIES AND REFERENCE TROUBLESHOOTING

Service Group E Contents

Title	Paragraph
Introduction	7-E-1
Power Supply Troubleshooting	7-E-3
Chassis Common Power Supply	7-E-5
Floating Common Power Supplies	7-E-7
Reference Circuitry Troubleshooting	7-E-13

7-E-1. INTRODUCTION

7-E-2. This Service Group has information used to troubleshoot the 3478A's Power Supplies and Reference Circuitry.

7-E-3. POWER SUPPLY TROUBLESHOOTING

7-E-4. The Floating Common Section of the 3478A has three power supplies which are: +5V, -15V, and +15V. The Chassis Common Section has one +5V supply. The following paragraphs have some troubleshooting information for the Chassis Common and Floating Common supplies (refer to Schematic 4).

7-E-5. Chassis Common Power Supply

7-E-6. A low supply can be caused if zener diode CR766 and capacitor C762 are shorted, if there is an excessive load on the supply (shorted component in the Chassis Common Logic Circuitry), or if regulator U760 is defective. A high supply can be caused by U760.

7-E-7. Floating Common Power Supplies

7-E-8. +5V Supply. A low supply can be caused by an excess load on the supply, a shorted CR712, or a defective U701. The supply can be checked by lifting jumper JM701. If the supply is still low, troubleshoot the supply. Otherwise, troubleshoot the Floating Common Circuitry.

7-E-9. A high supply is most likely caused by a defective U701.

7-E-10. +15V and -15V Supplies. Since the -15V supply is a mirror image of the +15V supply, use the following procedure for both supplies.

7-E-11. A low supply can be caused by an excessive load on the supply, a shorted filter capacitor or protection diode, an open temperature sensitive resistor (RT706 or RT707), or a defective regulator. The supply can be checked by lifting jumper JM703 for the +15V supply or jumper JM702 for the -15V supply. If the supply is now good, troubleshoot the Floating Common Circuitry. If still low, troubleshoot the supply.

7-E-12. A high supply is most likely caused by the regulators (U702 or U703).

7-E-13. REFERENCE CIRCUITRY TROUBLESHOOTING

7-E-14. The 3478A's Reference Circuitry is used to develop three reference voltages: +10V, -10V, and a buffered +10V. Since the -10V and buffered +10V depends on the +10V reference voltage, make sure the +10V is good before troubleshooting the other reference supplies. Perform the following checks (refer to Schematic 3).

a. If the +10V reference is inoperative, do the following:

1. Measure the voltage at zener diode U461. The voltage should be quiet and at approximately +7V.

2. If the voltage is wrong, replace U461.

3. If the voltage is good, short across capacitor C431. Measure pin 6 of U405.

4. If the voltage at pin 6 is approximately +7V and quiet, replace U403.

5. If the voltage is still incorrect or noisy, replace U405.

b. If the +10V is good and the -10V is incorrect or noisy, replace U405. If still incorrect or noisy, replace U403.

c. If both +10V and -10V voltages are good and the buffered +10V is is low, lift jumper JM201 (see Schematic 1). If the +10V is now good, replace U102. If still wrong, continue with the next step.

d. If the buffered +10V is wrong or noisy, do the following:

1. Check for a quiet -10V at pin 2 of U402.

2. If the voltage is wrong, replace U403.

3. If the voltage is good, connect pin 19 to pin 24 of U403.

4. If the voltage at pin 6 of U402 is now at +10V, replace U403. If not, replace U402.

SERVICE GROUP F
THEORY OF OPERATION

Service Group F Contents

Title	Paragraph
Introduction	7-F-1
General Block Diagram Theory Of Operation	7-F-3
Theory Of Operation	7-F-7
General	7-F-8
Input Circuitry	7-F-10
Ohms Current Source	7-F-17
AC to DC Converter	7-F-25
A/D Converter	7-F-31
3478A Logic Circuitry	7-F-50
Chassis Common Circuitry	7-F-55
Isolation Logic	7-F-71
Floating Common Circuitry	7-F-75
Power Supplies	7-F-83

7-F-1. INTRODUCTION

7-F-2. The following Service Group has the general and detailed description of the operating circuitry of the -hp- Model 3478A Multimeter. The general description explains the purpose of each operating block of the 3478A Simplified Block Diagram (shown in Figure 7-F-1). The detailed description explains the circuitry in each operating block.

7-F-3. GENERAL BLOCK DIAGRAM THEORY OF OPERATION

7-F-4. Refer to Figure 7-F-1 for the following discussion of the 3478A's General Block Diagram Theory Of Operation.

7-F-5. The 3478A can be separated into two major areas, Floating Common and Chassis Common. The Floating Common has the cicuitry which does the ac, dc, and ohms measurements. It consists of the Input Circuitry, A/D Converter, A/D Controller, Ohms Current Source, and AC to DC Converter. The Chassis Common is used to calculate and display readings, controls the Floating Common Circuitry, and sends and receives remote information. It consists of the Main Controller (the main CPU used with the Control ROM) and associated circuitry. Communications between the Chassis Common and Floating Common is done by the Isolation Circuitry.

7-F-6. The following paragraphs explain a typical measurement sequence.

a. Set-up. The 3478A receives range and function information from the front panel (local) or over the HP-IB (remote). The information is received by the Main Controller which then passes the information over the Isolation Circuitry to the A/D Controller. The A/D Controller then sets up the measurement circuitry to do the desired measurement. The Main Controller also sends information to the display to show the selected function and range. The following takes place in the 3478A's different functions.

b. DC Volts Function. The following occurs if the DC Volts Function is selected.

1. The Input Circuitry is set up to a certain gain configuration by the A/D Controller circuitry. The gain depends on the range selected.

2. The input voltage is amplified or attenuated (dependent on the range) to 10V (for full scale inputs) which is then applied to the A/D Converter.

3. The A/D Converter changes the voltage to digital information and transfers it to the A/D Controller. The A/D Controller then processes the information and transfers it over the isolation transformers to the Main Controller.

4. The Main Controller takes the information and calculates the correct reading. The correct reading is calculated by using the zero measurement (see step f) and the calibration constant(s) (which are stored in the Calibration RAM).

5. The corrected reading is then sent to the front panel to be displayed and sent over the HP-IB (if the 3478A is in remote and addressed to talk).

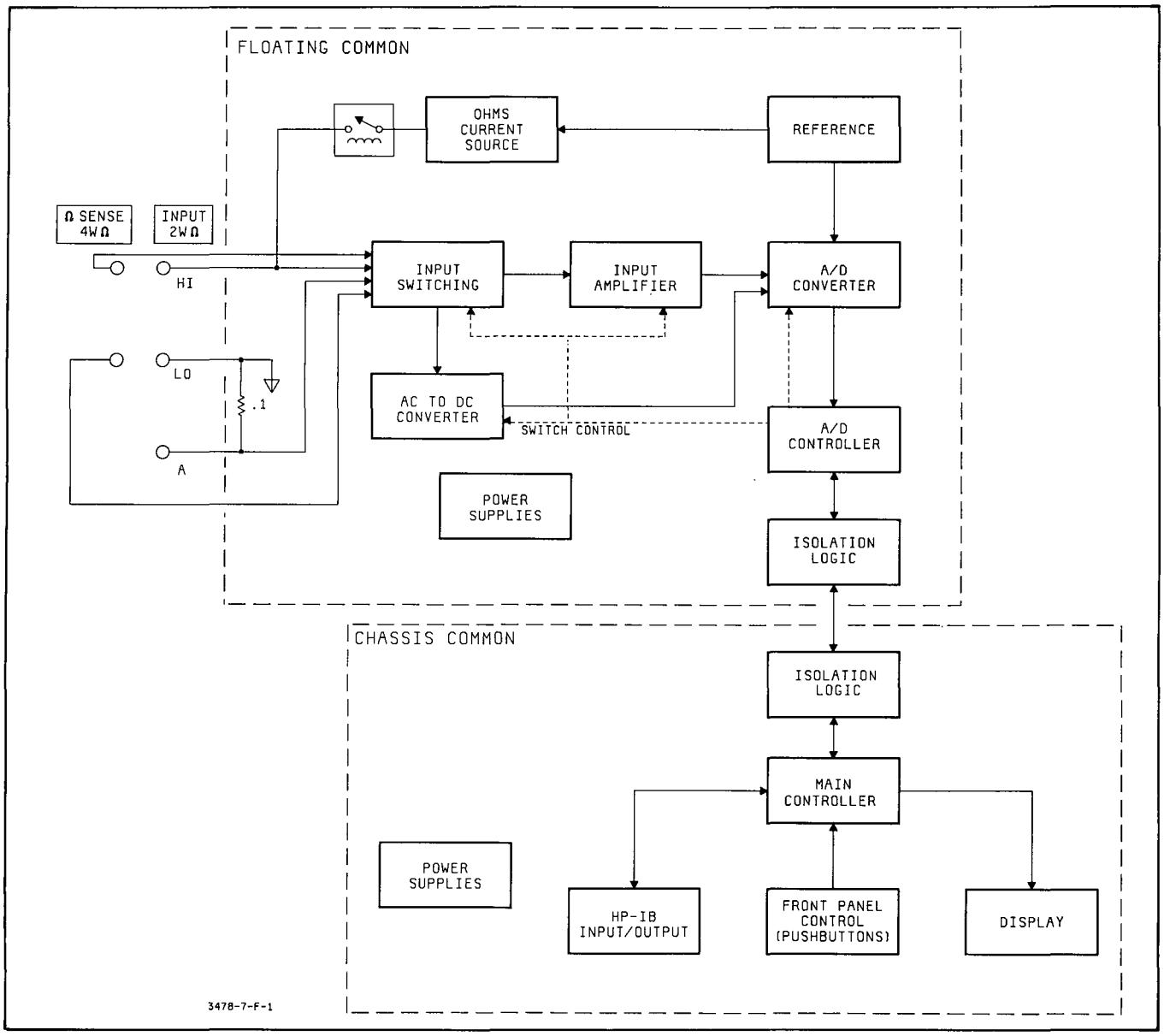

Figure 7-F-1. 3478A Simplified Block Diagram

c. Ohms Function. If the Ohms Function is selected, the Ohms Current Source supplies a known dc current to the unknown resistance. A voltage drop proportional to the unknown resistance and the current is applied to the Input Terminals. A regular dc measurement is then made (see step b) and the ohms reading is calculated by the Main Controller circuitry using the zero measurement (see step f) and calibration constant(s).

d. AC Volts Function. If the AC Volts Function is selected, the input is connected to the AC to DC Converter. The converter changes the voltage to its equivalent (RMS) dc voltage and applies it to the A/D Converter. The A/D Converter changes the voltage to digital information and applies it to the A/D Controller. The A/D Controller passes it on to the main controller which calculates the correct reading using the zero measurement (see step f) and calibration constant(s).

e. AC Current or DC Current Function. If the AC Current or DC Current Functions are selected, the input current is applied to resistor R107 (.1 ohm). The resultant voltage drop across the resistor is then measured. An ac or dc volts measurement is made, dependent on the function selected (AC Current or DC Current, respectively).

f. Autozero Function. If the 3478A's Autozero Function is enabled, an offset measurement (known as a zero measurement) is made before an input measurement. The zero measurement is made by connecting the input of the Input Amplifier (HI INPUT Terminal is open) to ground (LO INPUT Terminal). The resultant offset of

the amplifier is then measured and stored into memory. This reading is then subtracted from the DC Volts, DC Current, and Ohms readings that follow. If the AC Volts or AC Current Functions is selected, the zero reading is taken differently. The input to the A/D Converter is shorted to ground instead of the DC/Ohms Input Amplifier.

7-F-7. THEORY OF OPERATION

7-F-8. General

7-F-9. The following paragraphs give a detailed description of the operating circuitry in the 3478A. The circuitry is explained as follows:

a. Input Circuitry - paragraph 7-F-10.
b. Ohms Current Source - paragraph 7-F-17.
c. AC to DC Converter - paragraph 7-F-25.
d. A/D Converter - paragraph 7-F-31.
e. 3478A Logic Circuitry - paragraph 7-F-50.
f. Chassis Common Circuitry - paragraph 7-F-55.
g. Isolation Logic - paragraph 7-F-71.
h. Floating Common Logic Circuitry paragraph 7-F-75.
i. Power Supplies - paragraph 7-F-83.

7-F-10. Input Circuitry

7-F-11. General. The purpose of the Input Circuitry is to condition the dc input signals to the 3478A to provide full scale 10V dc input voltages to the A/D Converter, for full scale inputs to the 3478A (the explanation for ac inputs is in paragraph 7-F-25, AC to DC Converter). The Input Circuitry also acts as a buffer between the input and the A/D Converter. The cicuitry can be separated (and is explained) as follows:

Overvoltage Protection
Input Switching
Autozero and Pre-Charge
Pre-Charge Stage
DC/Ohms Input Amplifier

7-F-12. Overvoltage Protection. This circuitry has three parts: High Voltage Protection, Low Voltage Protection, and Current Protection. The two circuits operate as follows (refer to Schematic 1 for the explanation).

a. **High Voltage Protection.** This circuit consist of a 630V Surge Voltage Protector (E101) in series with a 220K ohm resistor. The circuitry is connected between the HI and LO INPUT Terminals and conducts with a peak voltage level of 630V (±20%), which provides a low impedance path across the terminals. Capacitor C104 provides a temporary low impedance path and R109 provides current limiting, if E101 conducts continuously.

b. **Low Voltage Protection.** This circuit consists of diodes connected to the individual input nodes (part of the HI INPUT, LO INPUT, A INPUT Paths, etc.). The diodes on each node are connected (internally in U102) to +3.5V and -3.5V power supplies. If the voltage on a node exceeds either +4.2V or -4.2V, a diode conducts and keeps the level on the node to the ±4.2V levels. The difference between the high voltage at the input terminals and the voltage at the input nodes is dropped across the resistors which are in series with the diodes and input terminals (the low pass filter). Figure 7-F-2A shows a typical protection circuit.

c. **Current Protection.** A fuse in series with the current shunt (R107) protects the shunt from excessive input currents (>3A).

7-F-13. Input Switching. The Input Switching Circuitry consists mostly of Relay and MOSFET switches, with most FET switches located in U102. The purposes of the switches are to provide five signal paths to the Input Amplifier and to connect the amplifier for a zero measurement (done in the Autozero Function; see paragraph 7-F-14). The switches are controlled by circuits in U102 which receive their control information from the A/D Controller. The following explains the various input paths. Refer to Figure 7-F-2 and Schematic 1 for the explanation.

a. **Low Voltage Range Input Path (Figure 7-F-2B).** The path consists of K101, R103, R104, R110, and S1DC (S1DC is in U102). The purpose of the path is to connect the HI INPUT Terminal (high input voltage) to the DC/Ohms Input Amplifier. The path is used only in the 30mV through 3V dc volts Ranges and all Ohms Ranges.

b. **High Voltage Range Input Path (Figure 7-F-2C).** The path consists of R110, K102, S2DC (in 102), and a 100:1 divider (9.9M ohm and 100K ohm resistors, RD99 and RD98, in U102). The purpose of the path is to attenuate input voltages by a facter of 100 and to connect the attenuated voltage to the DC/Ohms Input Amplifier. The path is used only in the 30V and 300V dc volts Ranges.

c. **Ohms High Sense Path (Figure 7-F-2D).** This path consists of R105, R106, and S4ADC and S4BDC (S4ADC and S4BDC are in U102). The path connects the HI OHMS SENSE Terminal (high ohms input) to the DC/Ohms Input Amplifier, only when the 3478A is in the 4-Wire Ohms Function. Switch S4CDC (which is also part of the path) is used to connect the junction of S4ADC and S4BDC to ground. Switch S4CDC is closed in all functions except the 4-Wire Ohms Function and shunts any possible voltage on the S4ADC and S4BDC junction to ground.

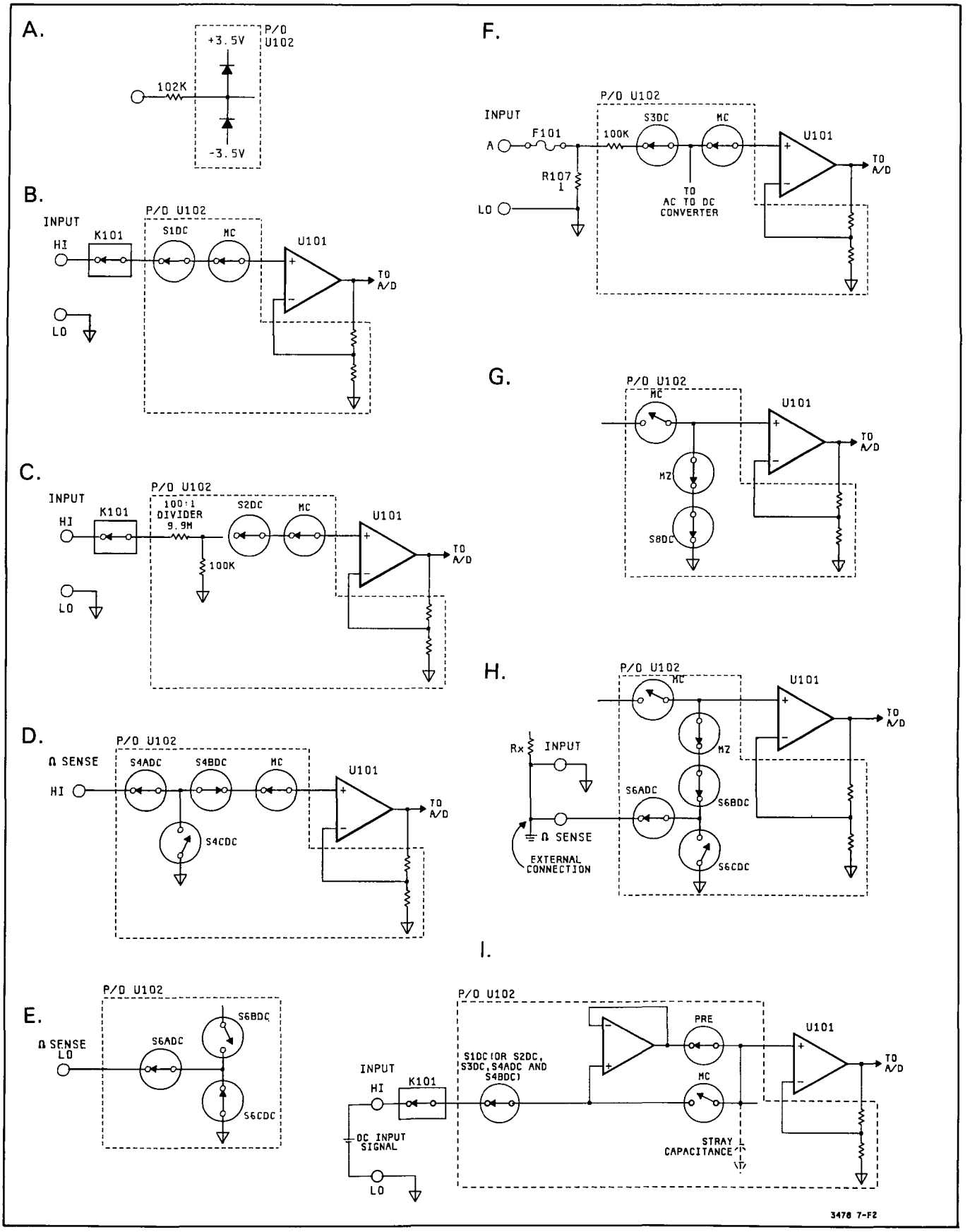

Figure 7-F-2. Simplified Schematic Of The Input Switching Circuitry

d. **Ohms Low Sense Path (Figure 7-F-2E).** This path consists of R101, R102, and S6ADC and S6CDC (S6ADC and S6CDC are in U102). The path is used to connect the LO OHMS SENSE Input Terminal (low ohms input) to ground (LO INPUT Terminal), when the 3478A is in the 4-Wire Ohms Function. In the 2-Wire Ohms Function, the low ohms input is the LO INPUT Terminal (which is connected to ground).

e. **Current Input Path (Figure 7-F-2F).** This path includes R107 and S3DC (in U102). The voltage drop across R107 (which is generated by the current being measured) is connected through S3DC to the DC/Ohms Input Amplifier. This path is used only in the DC Current Function.

7-F-14. Autozero. The Autozero Function of the 3478A is used to measure the offset (called a zero measurement) of the DC/Ohms Input Amplifier and subtract it from the input measurement. As long as the Autozero Function is enabled, a zero measurement is taken between each input measurement. The zero measurement is done in two different ways, dependent on the function selected. The following explains the two ways to make the measurement and the circuitry used.

a. **Autozero (in the DC Volts, DC Current, and 2-Wire Ohms Functions).** In the DC Volts, DC Current, and 2-Wire Ohms Functions, the zero measurement is made with switch MC (measure customer) open, and switch MZ (measure zero) and S8DC closed (see Figure 7-F-2G). Switch S8DC and MZ connects the DC/Ohms Input Amplifier to ground through a 102K ohm resistor. After the zero measurement is made, switch S8DC and MZ opens, and switch MC closes for the input measurement. (Note: MOSFET switches MC, MZ, and S8DC are in U102.)

b. **Autozero (in the 4-Wire Ohms Function).** In the 4-Wire Ohms Function, the zero measurement is made with switch MC (and S8DC) open and switch MZ, S6ADC, and S6BDC closed. The DC/Ohms Input Amplifier is connected to ground through the Ohms Low Sense Path (includes an externally connected lead; see Figure 7-F-2H) to the LO INPUT Terminal. This measurement is different than in the DC Volts, DC Current, and 2-Wire Ohms Functions, since the Input Amplifier is connected to ground through the externally connected low ohms sense and lo input leads. After the offset measurement is made, switch MC and S6CDC closes and switch MZ, S6ADC, and S6BDC opens. Switch S6CDC is used to to connect the junction of switch S6ADC and S6BDC to ground, shunting any possible voltage on the junction to ground. (Note: MOSFET switches S6ADC, S6BDC, and S6CDC are in U102.)

7-F-15. Pre-Charge Stage (Figure 7-F-2I). A small stray capacitance exists in U102 between the input of the DC/Ohms Input Amplifier and ground. During a zero measurement (measure zero in the Autozero Function), this capacitor is at zero volts. After the zero measurement, the input to the 3478A is applied to the Input Amplifier and the capacitor is charged to the input voltage. This charging may temporarily load down the input voltage and a wrong reading is taken. To prevent this, the input of the Input Amplifier is pre-charged to the input voltage before the input measurement is made. This is done by the Pre-Charge Amp and MOSFET Switch PRE (both in U102). The operation is as follows:

a. After the zero measurement is made, switch PRE closes (switch MC is still open).

b. The input voltage is connected to the Pre-Charge Amp using the input paths.

c. Since the Pre-Charge Amp is a X1 gain amplifier, a voltage with the same polarity and value as the input voltage is applied through PRE to the DC/Ohms Input Amplifier. This pre-charges the stray capacitor to the input voltage.

d. Switch PRE then opens and MC closes. An input measurement is then made.

e. The same takes place before the next input measurement.

7-F-16. DC/Ohms Input Amplifier. The purpose of the DC/Ohms Input amplifier, in conjunction with the Input Switching Circuitry, is to condition the 3478A's input signals. The conditioning is done to apply the same full scale 10V dc voltage to the A/D Converter for all DC Volts, DC Current, and Ohms full scale inputs. This is done by configuring the amplifier to a gain of X3.33, X33.3, or X333. The gains used in the 3478A's different ranges (in the DC Volts, DC Current, and Ohms Functions) is shown in Figure 7-F-3.

7-F-17. Ohms Current Source

7-F-18. General. The purpose of the Ohms Current Source is to provide a stable current for resistance measurements. The current is applied to the unknown resistance and the resultant voltage drop across the resistance is measured. Since this voltage drop is directly proportional to the unknown resistance, the resistance value is determined by the 3478A's Main Controller from the voltage reading.

7-F-19. The Ohms Current Source consists of the following circuitry: Voltage Splitter (Voltage Reference), Buffer, Range Resistors, Output FET Control Amp (Gate Bias Amplifier), Output MOSFET, and Overvoltage Protection. In addition to these, a number of MOSFETS are used as switches (to select various gain determining resistors). All the previously mentioned FETs are inside U102 which also controls the FET

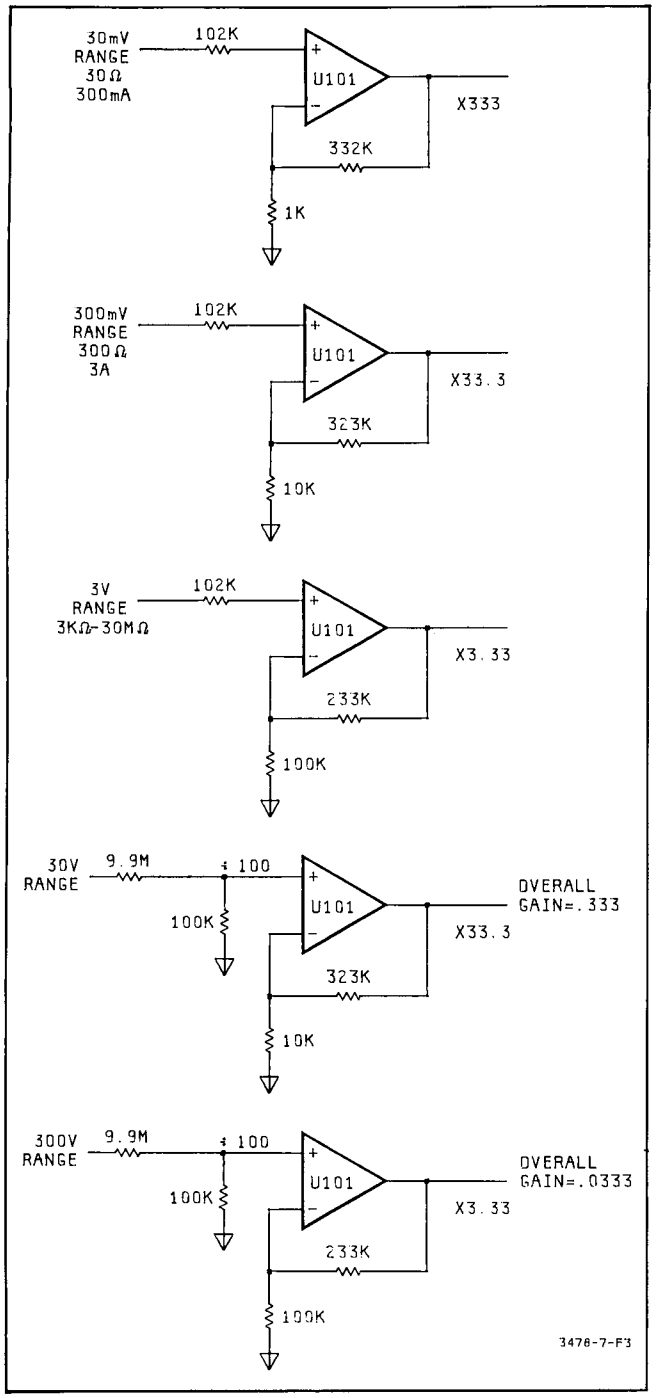

Figure 7-F-3. Simplified Schematic Of The DC/Ohms Input Amplifier

switches. The following paragraphs explain how the ohms current is generated and how the ohms circuitry operates. Refer to Schematic 1 and Figure 7-F-4 for the explanation.

7-F-20. Current Generation. The explanation on how current is generated is as follows:

a. The Voltage Splitter's (U201) output is +12V (or 8.4V for the 30M ohm Range only) which is applied to the positive terminal of Buffer U202. The reference output, which is applied to the positive terminal of the Output FET Control Amp U203, is divided down to +8V, irrespective of range, by feedback resistors RR3 and RR4 in conjunction with R206.

b. The output of the Buffer is +12V (or +8.4V for the 30M ohm Range only) which is applied to one side of either Range Resistor RR5, RR6, RR7, or RR8 (dependent on the selected range). The other side of the Range Resistors is applied to the Output FET Control Amp.

c. Since the Output FET Control Amp is a high gain operational amplifier with its non-inverting terminal at

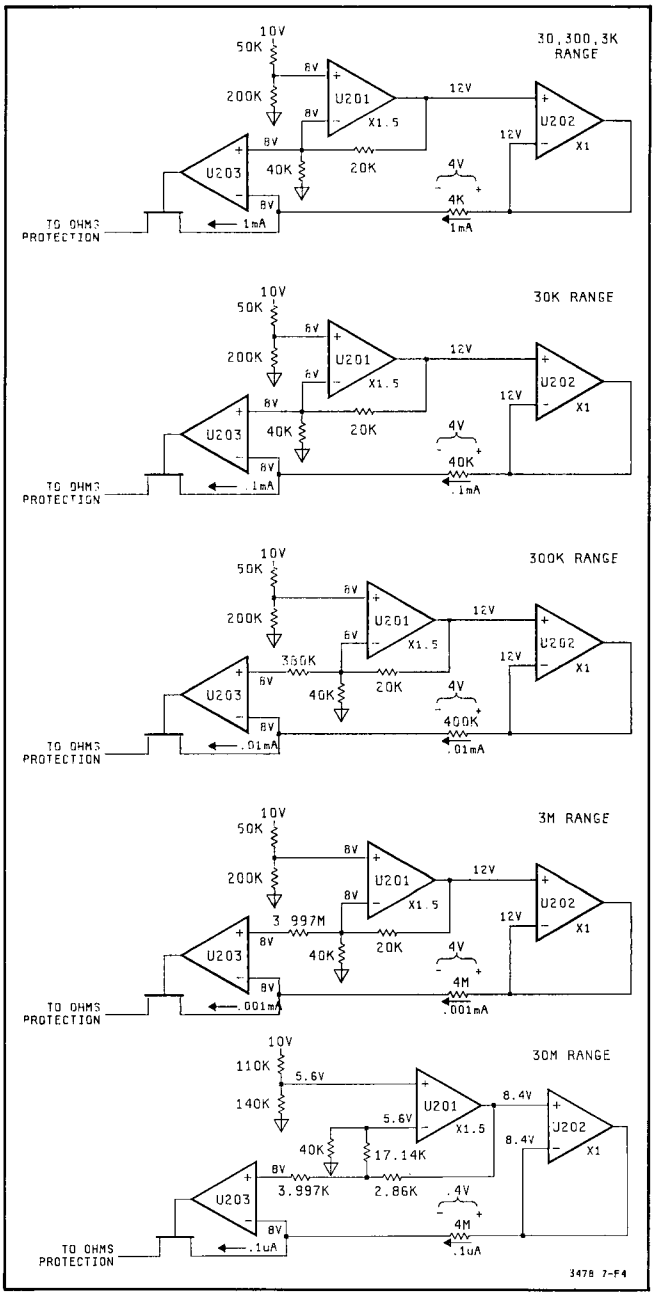

Figure 7-F-4. Ohms Circuitry Configuration

+8V, its inverting terminal must also be +8V (the inverting terminal draws little or no current). This makes the resultant voltage drop across the Range Resistors +4V (or +.4V for the 30M ohm Range).

d. A current is then generated with its value proportional to the value of the Range Resistor and the voltage drop across the resistor.

e. The current is applied to the unknown resistor through the Output MOSFET (in U102), High Voltage Protection Circuitry, and the HI INPUT Terminal. The 3478A's Ohms Ranges, Ohms Currents, Range Resistors, and selected MOSFET Switches are listed in Table 7-F-1.

7-F-21. Voltage Splitter (U201). The following explains the Voltage Splitter (Reference) Circuitry.

a. The Voltage Splitter is a X1.5 gain non-inverting amplifier with an output of +12V (for the 300 ohm to 3M ohm Ranges) or +8.4V (for the 30M ohm Range).

b. The gain is determined by feedback resistors RR3, RR4 (both in U102), and R201. Since the total value of RR3 plus RR4 is 20K ohm and R201 is 40K ohm, the non-inverting gain is X1.5. (The gain is: [20K/40K] + 1 = 1.5).

c. The +12V output is generated by applying +8V to the amplifier input (8*1.5 = 12). The +8V is determined by the +10V Reference (from the 3478A's Reference Circuitry, see paragraph 7-F-49d) and voltage divider RR0, RR1, and RR2. The sum of RR1 and RR2 is 200K ohm and RR0 is 50K ohm resulting in a voltage drop across the resistors of +8V and +2V, respectively. The +8V is applied through FET Switch S0R to U201.

d. The +8.4V output is generated by applying +5.6V to the amplifier input (5.6*1.5 = 8.4). The +5.6V is also determined by the +10V Reference (from the 3478A's Reference Circuitry) and voltage divider RR0, RR1, and RR2. In this case the voltage drop across RR2 (which is +5.6V developed across 140K ohm) is applied through FET Switch S1R to U201.

7-F-22. Buffer (U202) and Range Resistors (RR5 to RR8). The Buffer is a non-inverting X1 gain amplifier with its output at either +12V or +8.4V (on the 30M ohm Range only). The gain is selected by either MOSFET Switch pairs S6R and S7R, S8R and S9R, S10R and S11R, or S12R and S13R. The Range Resistors are used to determine the different ohms current values. Refer to Table 7-F-1 to determine which switch and resistor is selected for the different ohms ranges.

7-F-23. The Output FET Control Amplifier (U203) and the Output MOSFET (in U102) form a feedback circuit used to boost the output impedance of the Output MOSFET. The FET is normally biased into saturation, and in conjunction with the open loop gain of U203 and the Range Resistors, results in a high output impedance of the Ohms Current Source. A high output impedance is necessary to prevent measurement nonlinearities.

7-F-24. Overvoltage Protection Circuitry. The circuitry is used to protect the Ohms Current Source from high voltages inadvertently applied to the 3478A's Input Terminals (when the multimeter is in the Ohms Function). The following explains the circuitry operation.

a. If a large positive voltage is applied to the 3478A's HI INPUT Terminal, the voltage is applied through R204 and L201 to the cathode of CR201. Since the cathode voltage of CR201 is higher than the anode voltage, the diode is reverse biased. This prevents the large input voltage from damaging the current source.

b. If a large negative voltage is applied to the 3478A's HI INPUT Terminal, the voltage is dropped across CR201, R203, and R202 to diode connected FET Q205. This makes Q205 conduct and in turn clamps the base of Q202 at -.7V (one diode drop). This voltage along with negative collector to base voltage forces Q201, Q202, Q203, and Q204 to turn on. Transistors Q201 and Q203 conducts no more current than the circuit which generates the ohms current (on a given range). The circuit that generates the ohms current cannot tell the difference between a valid unknown resistance and the large negative input voltage. Most of the large input voltage is dropped across R202 and R203.

7-F-25. AC to DC Converter

7-F-26. The purpose of the AC to DC Converter is to convert the 3478A's ac inputs (volts or current) to dc volts. The converter output is +3.00000V dc for all full-scale ac inputs with the output applied to the A/D Con-

Table 7-F-1. Ohms Current and Ranges

Ohms Range	Ohms Current	Range Resistor	Resistor Voltage	FET Switches Enabled
30-3K	1mA	4K (RR5)	4V	S0R,S2R,S3R,S6R,S7R,S14R
30K	.1mA	40K (RR6)	4V	S0R,S2R,S3R,S8R,S9R,S14R
300K	.01mA	400K (RR7)	4V	S0R,S2R,S4R,S10R,S11R
3M	1uA	4M (RR8)	4V	S0R,S2R,S12R,S13R
30M	.1uA	4M (RR8)	.4V	S1R,S5R,S12R,S13R

verter. All ac ranging is done in the AC to DC Converter.

7-F-27. The AC to DC Converter consists of three amplifier stages and a True RMS Converter. The purpose of the amplifier stages is to provide the same full scale input voltage to the RMS Converter for all full scale ac inputs, and to be a buffer between the converter and the ac inputs. The True RMS Converter does the actual ac to dc conversion. The following explains the circuitry operation.

7-F-28. Amplifier Stages. Refer to Figure 7-F-5 and Schematic 2 for the following explanation.

a. The first amplifier stage (U301A) is an inverting amplifier with gains of X.001, X.1, or X1 (dependent on the ac range and function selected). The gains are determined by resistors RA1, RA2, RA3, and RA11 (all in U102), as shown in Figure 7-F-5. Capacitor C302 and resistor R305 are used for high frequency compensation (for flat gains at high frequency). The gain determining resistors are selected by MOSFETS S1AC through S6AC, and S11AC (all in U102) which operate as switches. The gains of the amplifier and FETs selected for the ac functions are listed in Table 7-F-2.

b. The second amplifier stage (U301B) is an inverting amplifier with gains of X.4 or X4 (dependent on the ac

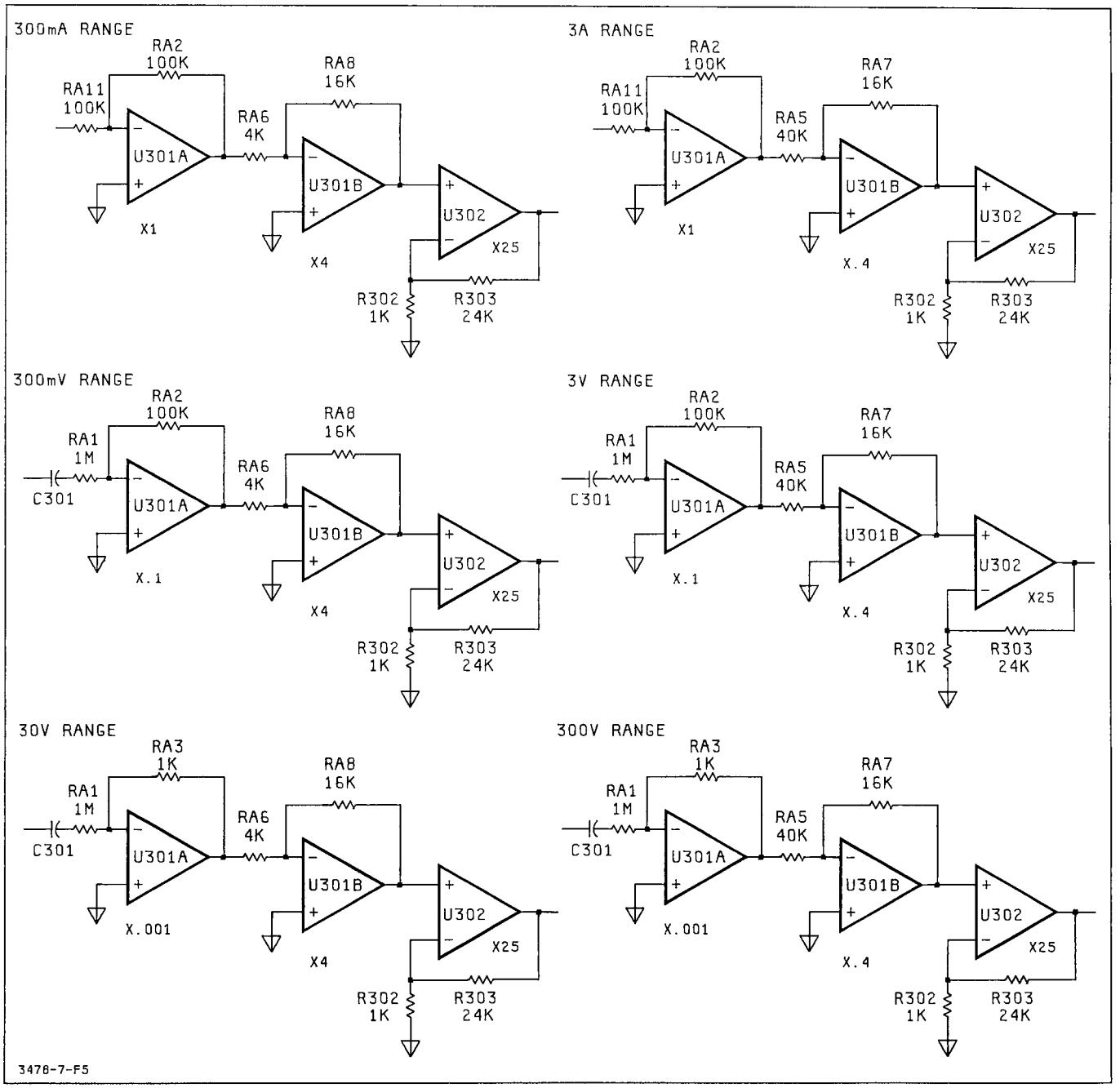

Figure 7-F-5. AC Gain Configurations

Table 7-F-2. AC Amplifier Gains

Function and Range	Stage 1 Gain	Stage 2 Gain	Total Gain	Switches (FETs) Enabled
ACV 300mV	.1	4	10	S2AC,S4AC,S5AC,S8AC,S10AC
ACV 3 V	.1	.4	1	S2AC,S4AC,S5AC,S7AC,S9AC
ACV 30 V	.001	4	.1	S1AC,S3AC,S6AC,S8AC,S10AC
ACV 300 V	.001	.4	.01	S1AC,S3AC,S6AC,S7AC,S9AC
ACI 300mA	1	4	100	S4AC,S5AC,S8AC,S10AC,S11AC
ACI 3 A	1	.4	10	S4AC,S5AC,S7AC,S9AC,S11AC

range and function selected). The gains are determined by resistors RA5, RA6, RA7, and RA8 (all in U102), as shown in Figure 7-F-5. The gain determining resistors are selected by FETs S7AC to S10AC (all in U102) which operate as switches (see Table 7-F-2). Resistor RA9 (in U102) is used for the amplifier to have the same high frequency response in X4 gain as in X.4 gain. Resistors R306 and R307, and C310 and C313 are used to filter the +15V and -15V power supplies, respectively.

c. The third amplifier stage (U302) is a non-inverting amplifier with a gain of X25 in all ac ranges and functions. The output of the amplifier is applied to the RMS Converter and is 3V RMS for all full scale ac inputs in all ac functions and ranges. Capacitor C305 is used for high frequency compensation (for flat gains at high frequency).

7-F-29. True RMS Converter (U303). The True RMS Converter's output is a positive dc voltage with its value equal to the true rms value of the input. For example, a sine wave input of 1V RMS ac generates a +1V dc output.

7-F-30. Refer to Schematic 2. The RMS Converter has one major stage that does the actual conversion and a buffer (used as an output stage). The converter stage and the buffer are externally connected by R304. Pin 9 of U303 is the input to the buffer and pin 10 is the output of the converter stage. The gain of the buffer is X1 which is internally set. Capacitor C307 is the RMS Converter's averaging capacitor and C308, C309, and resistor R304 are used with the buffer as a ripple filter.

7-F-31. A/D Converter

7-F-32. General. The A/D Converter is used to change dc voltages to digital information. The circuitry consists of an Integrator (U401 and associated circuitry), Voltage Reference (U461 and associated circuitry), and the A/D Hybrid (U403). The A/D Converter operation is controlled by the A/D Controller (U462).

7-F-33. The A/D conversion method used by the 3478A is called Multi-Slope II and has two operating states: Runup and Rundown. The 3478A's most significant digits are determined during runup (see paragraph 7-F-41) and the least significant digits are determined during rundown. The integration time depends on the selected Number Of Digits Displayed (3 1/2, 4 1/2, or 5 1/2). To help understand Multi-Slope II, first consider the operation of the Dual-Slope Conversion method. This method is explained in the following paragraph.

7-F-34. Dual-Slope Conversion. In dual-slope conversion, an integrator capacitor charges for a fixed time period (as shown in Figure 7-F-6), which is done during runup. The charging rate and the resultant amplitude of the charge is proportional to the voltage applied to the integrator. The integrator capacitor is then discharged at a fixed rate determined by a known reference voltage and is done during rundown. Since the discharge rate is constant, the discharge time is proportional to the amplitude of the charge (input voltage). The amplitude level can then be determined by the discharge time.

7-F-35. Multi-Slope II Conversion. Multi-Slope II is similar to Dual-Slope in that a capacitor is charged and discharged by the input voltage and by known reference voltages. The following paragraphs explain the Multi-Slope II operation (runup and rundown).

7-F-36. Simplified Explanation of Runup. The Runup operation lasts for 349 A/D counts with one A/D count equal to 30 (36 in the 50Hz option) cycles of the ALE clock (Address Latch Enable at U462 pin 11). Each A/D count results in one A/D ramp (or slope) at the output of the A/D Integrator. The same time is used in both the 5 1/2 and 4 1/2 digit mode (349 ramps), with 10 readings taken in the 5 1/2 digit mode (making the integration time time longer, see paragraph 7-F-40). Only 34 ramps are used in the 3 1/2 digit mode. The ALE clock is generated by the A/D Controller (U462, also known as the Floating Common CPU). Refer to Figure

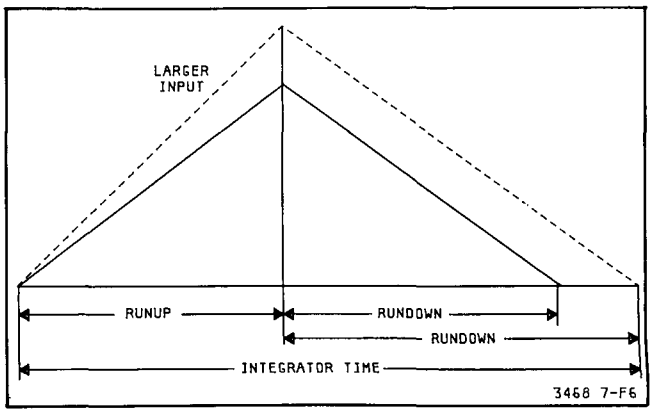

Figure 7-F-6. Dual Slope Conversion

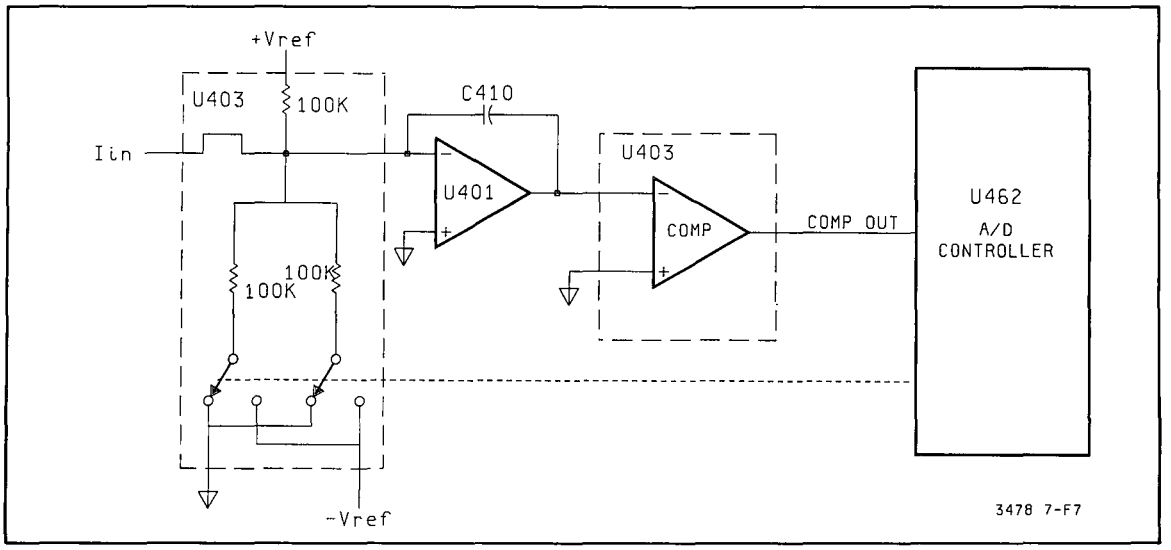

Figure 7-F-7. Simplified A/D Converter

7-F-7 and Figure 7-F-8 for the following simplified explanation of the runup operation.

a. When runup starts, the input voltage (A/D Converter input voltage, not instrument input voltage) is applied to integrator U401. The resultant input current (Iin) then charges integrator capacitor C410 and a certain slope (output of the integrator) is then developed. This happens at time period T1 (see Figure 7-F-8). (The input voltage is always applied during runup.)

b. After time period T1, a negative going current is applied to the integrator for a set time period. This current, in addition to the input current, charges C410. This generates a positive going output slope (the integrator output). The applied current makes sure that the output slope that follows will cross zero, whether the input current is positive or negative. The current is applied for time period T2.

c. After time period T2, the applied current (not the input current) is removed and a current of opposite polarity is then applied to U401 for new time period T3 (T3 is twice as long as T2). The newly applied current is the same value as the first applied current (at time T2), but at opposite polarity. The new current then charges C410 in the opposite direction (C410 is discharged). This is because the applied current is larger than the input current.

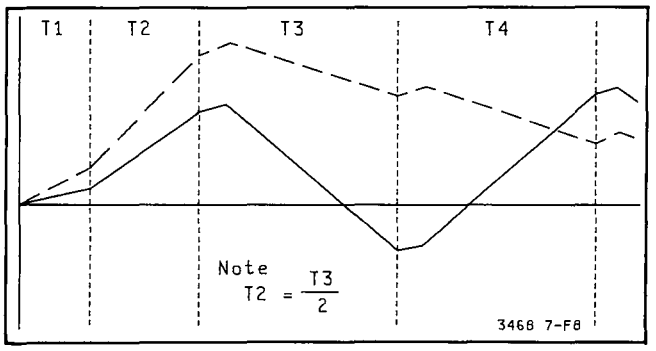

Figure 7-F-8. Integrator (U401) Output Slopes

d. When time T3 is completed, the A/D Controller determines if the output slope crossed zero. If zero crossing is detected, a current with the same value and an opposite polarity as the previously applied current is applied. This current is the same current as the first applied current and is applied to the integrator for a new time period T4 (T4 is as long as T3). This current, in addition to the input current, then charges C410. Since both currents charge C410, the output slope becomes steeper and, as shown in Figure 7-F-8, crosses zero.

e. If no zero crossing (in step c) was detected (because of a larger input voltage), the same current as the previously applied current is applied for the new time period T4. The current is reapplied until zero crossing is detected. (This is shown as the dashed lines in Figure 7-F-8).

f. The operation in steps c and d, or in steps c and e continues until the runup operation is completed. The total runup operation lasts for 349 ALE ramps (or counts).

g. During the runup operation, a counter in the A/D Controller increments during the positive going slope periods and decrements during the negative going slope periods. The counter, in effect, is used to determine the amount of charge added and subtracted from the input voltage. From that information, the most significant digits of the 3478A's reading is calculated.

7-F-37. Detailed Explanation of Runup. Figure 7-F-9 illustrates the 3478A runup operation in the 4 1/2 digit mode. Refer to the figure (and Schematic 3) for the runup explanation in the following steps. The solid lines (in the figure) showing the runup sequence is for a

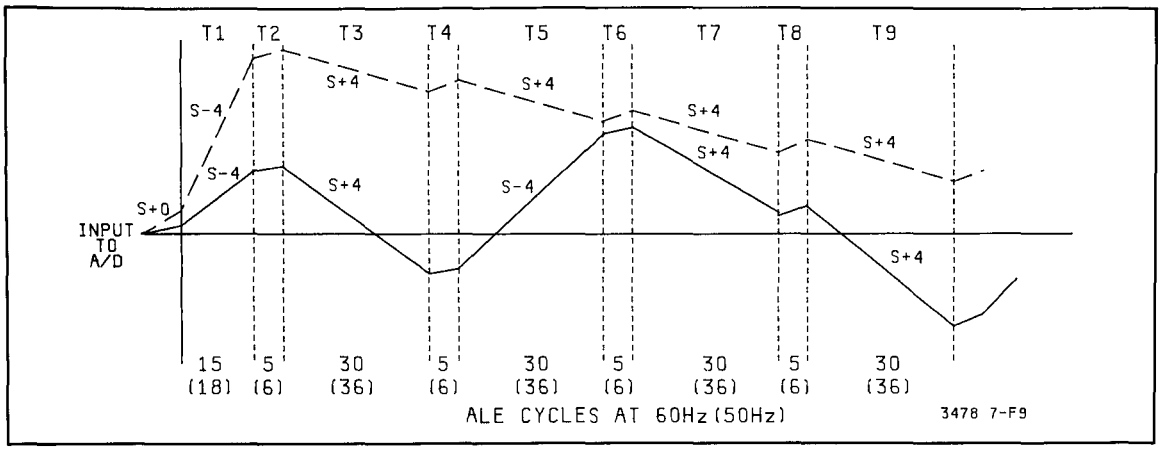

Figure 7-F-9. Runup Slopes (4 1/2 Digit Model)

hypothetical input value. The dashed lines are for a larger hypothetical input value.

a. When runup starts, the integrator capacitor (C410) is charged by the input current (which is developed by the input voltage). The input current is applied to the negative terminal of integrator U401 (see Figure 7-F-7), and since the integrator is in the inverting configuration, the resultant output of U401 is positive (for positive input currents the slope is negative). The capacitor is charged for a short time period.

b. During the time period when only the input current is applied, no other currents charge C410. Since no other current is applied to U401 (except the input current), it is called a no current condition and the resultant output slope is called slope S + 0.

c. After the time period, a negative current (called S-4) is then applied to U401. This current develops a positive going output slope which is called slope S-4. The S-4 current is always the first current applied to the integrator after the input current is applied. The current is applied for 15 ALE cycles (18 ALE cycles in the 50 Hz option) and is for time period T1. Since the input current and the applied current in the example have the same polarity, both charge C410. If the input current was at opposite polarity, C410 will still be charged in the same direction but the output slope will be less steep. This is because the applied current (S-4) is normally larger than the input current.

d. After time period T1, current S-4 is removed. A no current condition (slope S-0) will then exist for 5 ALE cycles (or 6 ALE cycles for the 50Hz option) during time period T2. The charge rate of Capacitor C410 is again determined by only the input current. Slope S-0 is also a no current condition, as is slope S + 0. The major difference is that the slopes are generated differently (see paragraph 7-F-39). Slope S-0 is selected since the previous no current condition was slope S + 0. The slopes alternate with each other (S + 0, S-0, S + 0, etc.) for each no current condition.

e. When time T2 is completed, an S + 4 current is applied for 30 ALE cycles (36 ALE cycles for the 50Hz option) during time period T3. The S + 4 current has the same value as S-4, but at opposite polarity. This charges C410 in the other direction (i.e. the capacitor is discharged and then charged in the other direction). Time period T3, and the T5, T7, and T9 periods that follow are twice as long as time period T1 (30 or 36 ALE cycles instead of 15 or 18 ALE cycles).

f. After time T3, the S + 4 current is removed and no current (slope S + 0) is applied for time T4. Time T4 is as long as time period T2 (5 or 6 ALE cycles). This is also the same time for the S-0 or S + 0 slopes that follow.

g. When T4 is completed, the A/D Controller then determines if the output slope has crossed zero. Zero crossing occurs when the A/D comparator's output (CMP output at U403 pin 11) changes state. In the example, zero crossing is detected and current S-4 is applied for time T5 (30 or 36 ALE cycles).

h. After time T5, current S-4 is removed and no current (slope S-0) is applied for time T6. Since zero crossing was detected (during time T5), current S + 4 is applied for time T7, after slope S-0 is completed.

i. When time T7 is completed, no current (slope S + 0) is applied for time T8. Since no zero crossing was detected, current S + 4 is reapplied for time T9 (after slope S + 0).

j. Since zero crossing was detected during time T9, current S-4 is applied (after slope S + 0) for 30 (or 36) ALE cycles. Then S + 4 is applied (since zero crossing is detected) and so on. This takes place until the runup time is completed (either current S + 4 or S-4 is selected, dependent upon if and when zero crossing occurs).

k. Once the runup operation is completed, U462 then determines the 2 most significant digits of the reading. For other than a zero reading, the number of S + 4 slopes will always be different than the number of S-4

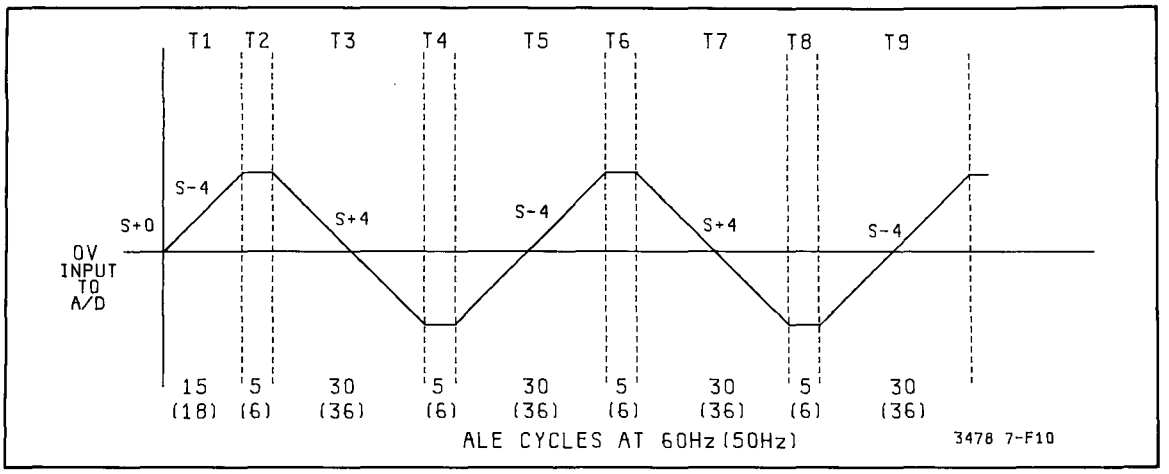

Figure 7-F-10. Runup Slopes for Zero Inputs (4 1/2 Digit Model)

slopes. For a perfect zero reading, the number of S+4 slopes will be the same as the number of S-4 slopes. This is represented in Figure 7-F-10.

7-F-38. Slope S+4 and S-4 Generation. The following explains how the curents for slopes S+4 and S-4 are generated.

a. **Slope S+4.** Refer to Figure 7-F-11. Note that both Y1 and Y2 paths are connected to ground. Since the summing node of the paths is a virtual ground and Y1 and Y2 are also connected to ground, no current flows between the paths and the summing node. Current does flow from +Vref (Positive Reference Voltage) through a 100K ohm resistor into the integrator capacitor (connected to the negative terminal of U401). This generates a negative going output slope.

b. **Slope S-4.** Refer to Figure 7-F-12. Note that both Y1 and Y2 paths are connected to -Vref (Negative Reference Voltage). Since the summing node is a virtual ground, current flows from +Vref through a 100K ohm resistor and paths Y1 and Y2 to -Vref. Current also flows from the integrator capacitor (C) to -Vref. This current is generated because the total resistance of the Y1 and Y2 paths is smaller than the 100K ohm resistor from +Vref. The current from +Vref plus the current from the capacitor equals the total current through paths Y1 and Y2. Since the total resistance of paths Y1 and Y2 is 50K ohms, the current from +Vref (I1) and the current from the capacitor (I2) is half as large as the total Y1 and Y2 current (I3). The resultant output slope is positive.

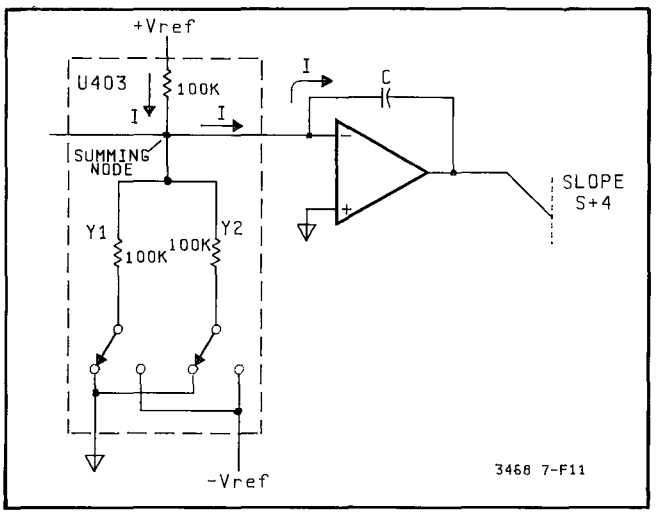

Figure 7-F-11. Slope S+4 Generation

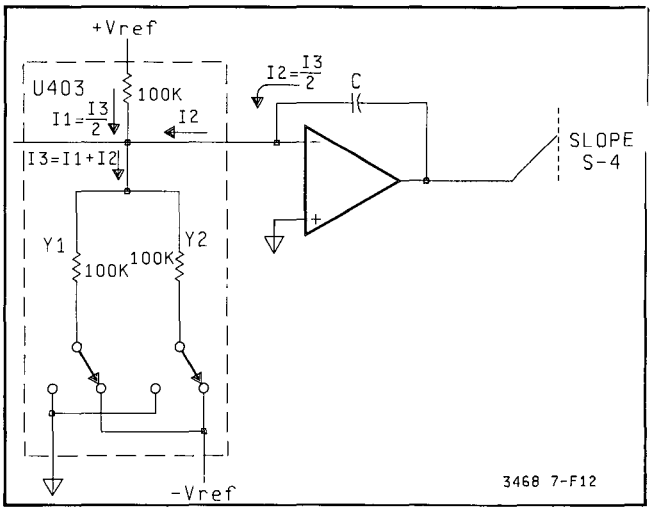

Figure 7-F-12. Slope S-4 Generation

7-F-39. Slope S+0 and S-0 Generation. Refer to Figure 7-F-13. Note that one side of a 100K ohm resistor (Y1 path) is connected to ground and the other side is connected to the summing node. Since the 100K ohm resistor from +Vref (Y3 path) and the 100K ohm resistor from -Vref (Y2 path) are also connected to the summing node, no current flows from the integrator capacitor (C). This is because the resistance value of path Y2 and Y3 is the same and makes the current value of paths Y2 and Y3 the same (but opposite polarity). This is true for both slopes S+0 and S-0. The only dif-

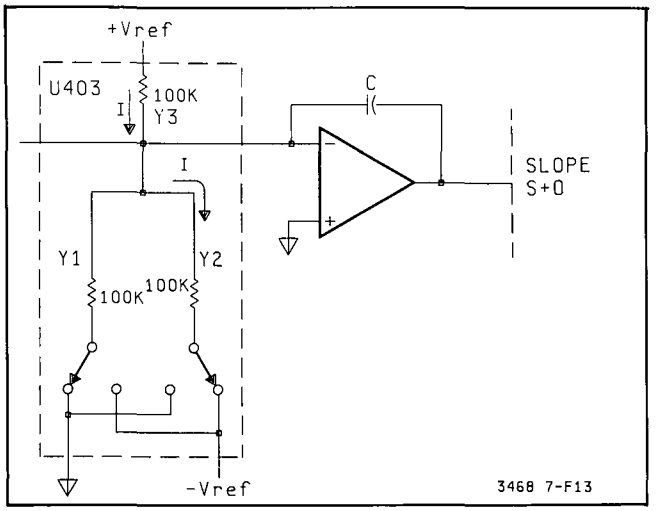

Figure 7-F-13. Slope S+0 and S-0 Generation

ference is that paths Y1 and Y2 are switched when the slopes are switched (Y1 to ground and Y2 to -Vref, or Y2 to ground and Y1 to -Vref).

7-F-40. Runup Time. The runup time changes with the number of digits selected. For the 3 1/2 Digit mode, the time is 1/600 second (for both the 60Hz and the 50Hz options) and is called .1 PLC (Power Line Cycles). For the 4 1/2 Digit mode, the time is 1/60 second (1/50 second for the 50 Hz option) and is called 1 PLC. The 5 1/2 Digit mode is different. In this mode, 1 PLC is used for the runup time with the A/D operation repeated ten times. The resultant ten readings are then averaged and the answer becomes a single reading.

7-F-41. Digit Generation. When the 3478A is in the 4 ½ and 5 ½ Digit mode, the first two significant digits (of the reading) are determined during runup. In the 3 ½ Digit mode, only the first digit is determined. In rundown, the three least significant digits are determined in all modes. A total of 5½ digits are developed in both the 5½ and 4½ digit modes. Since only 4½ digits are displayed in the 4½ digit mode, the last digit in the mode is rounded off to the next higher digit.

7-F-42. Rundown. When runup is completed, the voltage at the A/D Converter's input is removed and the input is then connected to ground. The rundown operation then starts. Rundown is used to determine the three least significant digits of the 3478A's reading.

7-F-43. After runup, a voltage (or charge) remains on the integrator with its amplitude and polarity dependent on the last current applied (S+4 or S-4) and the input voltage (applied during runup). By obtaining the value of the remaining voltage, the least significant digits can then be determined. The voltage value is obtained by applying various currents to the integrator and counting the number of times the currents have to be applied for the resultant output slopes of the integrator to cross zero.

7-F-44. The currents applied to the integrator are called the S-4, S+4, S-3, S+2, S-1, and S+1 currents and the resultant output slopes are the S-4, S+4, S-3, S+2, S-1, and S+1 slopes. Each one of the currents (S-4, S+4, etc.) are applied (in the given order) to the integrator a set number of times until zero crossing occurs. The only exception is the first S-4 current (see paragraph 7-F-45 step c). The first and second set of currents applied are the S-4 and S+4 currents, respectively. These currents have the same value as the S-4 and S+4 currents used in the runup operation, but are applied half as long. The S-4 and S+4 slopes are each 15 ALE cycles long (30 ALE cycles in runup) and are called half-ramps. The next currents applied (in order) are the S-3, S+2, and S-1 currents, with S-0 slopes applied between them.

7-F-45. Rundown time is separated into five time periods, as shown in Figure 7-F-14. Refer to the figure for the following explanation on the rundown operation.

a. When rundown starts, the polarity of the remaining voltage on the integrator is determined by the A/D Controller (U462). The polarity is determined by the output state of the A/D comparator (CMP output at U403 pin 11). A high output level shows a positive voltage and a low level shows a negative voltage.

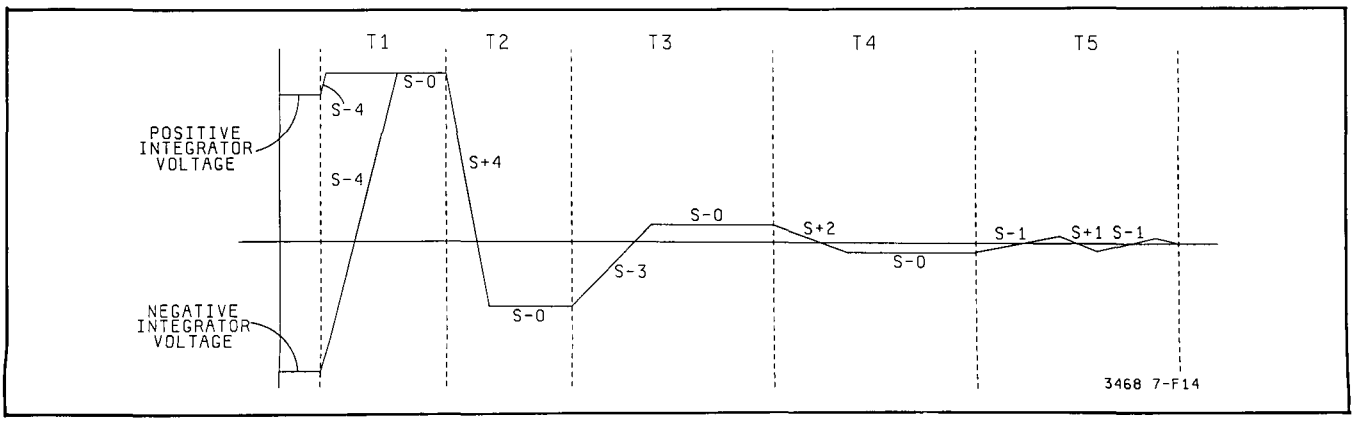

Figure 7-F-14. Rundown Slopes

b. If it has been determined that the remaining voltage on the integrator is negative, S-4 currents are applied a number of times until zero crossing occurs (CMP output changes state). Since the S-4 currents can be applied (during time T1 in Figure 7-F-14) to a maximum of three ramps, the resultant output slope S-4 will normally cross zero with three or less S-4 currents applied. After zero crossing occurs, the current is removed with 15 ALE cycles (i.e. one half-ramp) after the S-4 slope crosses zero. If (after the current is removed) time T1 is not completed, a no current condition remains (i.e. an S-0 slope) for the rest of time T1. No current is applied to keep the rundown time constant.

c. If the remaining voltage on the integrator is positive, current S-4 is applied for a short time and then removed. The current is applied for a short time because the current develops a positive output slope and the integrator voltage is also positive. Both the slope and the integrator voltage together could saturate the integrator. When Current S-4 is removed, no current (an S-0 slope) is then applied for the rest of time T1. Current S-4 is applied whether the integrator voltage is positive or negative. This is to make sure that the slopes that follow (slope S + 4) will always cross zero and that the same transitions occurs for all readings.

d. The next current applied is positive S + 4 current. Its value is the same as S-4, but in the opposite direction. The current is applied until slope S + 4 crosses zero. The current can be applied (during time T2) a maximum of three ramps. This makes time T2 the same as time T1. The S + 4 currents are also removed within 15 ALE cycles after the S + 4 slope crosses zero. Here again, no current is applied (slope S-0) for the remainder of time T2.

e. After time T2, the next current applied is negative S-3 current (its polarity is opposite of S + 4). Because the value of an S-3 current is 1/10 the value of an S-4 current, the resultant S-3 slope is not as steep and takes longer time to cross zero. This makes the maximum number of times the currents can be applied (during time T3) seven times instead of three. The S-3 current is also removed within 15 ALE cycles after slope S-3 crosses zero. Then no current (S-0) is applied for the remainder of time T3.

f. When time T3 is completed, positive current S + 2 is applied. This current is 1/10 the value of S-3 (1/100 of S-4) and in the opposite direction. The maximum number of times the S + 2 current can be applied is seven (as are S-3 currents). Time T4 has the same amount of time as T3. The S + 2 currents are also removed within 15 ALE cycles after slope S + 2 crosses zero. Then no current (S-0) is applied for the remainder of time T4.

g. The next current applied is negative S-1. This current is 1/10 the value of S + 2 (1/1000 of S + 4) and in the opposite direction. The current is applied until it crosses zero. The currents are also removed within 15 ALE cycles after slope S-1 crosses zero.

h. Once the S-1 currents are removed a positive S + 1 current is applied for 5 ALE cycles and is called one sixth ramp. This current is applied instead of no current and only happens after the S-1 slope. The current has the same value as S-1, but in the opposite direction. The currents are applied until zero crossing occurs and are removed within 5 ALE cycles after crossing zero.

i. After current S + 1 is removed, within 5 ALE cycles, current S-1 is reapplied. This new S-1 current is also applied until zero crossing occurs. After S-1 slope cross zero, current S + 1 is reapplied. After current S + 1 is removed, S-1 is applied, and so on. This takes place until time T5 (and rundown) is completed.

j. During the rundown time, a counter in the A/D Controller counts the number of S-4, S + 4, S-3, S + 2, and S-1 slopes it takes for each set of slopes to cross zero. This is then used to calculate the three least significant digits of the 3478A's reading.

7-F-46. Integrator Offset Compensation. The A/D Integrator can have offsets which prevent the S + 2 and S-1 slopes from crossing zero. To make sure the slopes will cross zero, the A/D's DAC (Digital to Analog Converter, U465 and associated circuitry) is turned on before the S + 2 currents are applied. The DAC is used to null out any offsets from the integrator. The maximum number of times the S + 2 current can be applied is seven (as are S-3 currents). Time T4 has the same amount of time as T3. The S + 2 currents are also removed within 15 ALE cycles after slope S + 2 crosses zero. Then no current (S-0) is applied for the remainder of time T4.

7-F-47. The correct DAC setting is determined during the time when the S + 1 and S-1 currents are applied. These currents are applied after the first set of S-1 slopes have crossed zero (see paragraph 7-F-45, step g). Since both S + 1 and S-1 currents have the same amplitude, the S + 1 and S-1 slopes should have the same magnitude (i.e. zero crossing should occur at a a certain time). If a difference in magnitude is noted by the A/D Controller, the DAC is adjusted until the magnitude of the S + 1 and S-1 slopes are the same. This is illustrated in Figure 7-F-15.

7-F-48. Rundown Slope Generation. The S-4 and S + 4 slopes are generated the same way it is done for the runup operation (see paragraphs 7-F-38). The only difference is that they only depend on the applied S-4 and S + 4 currents, not the input current. The S-0 slope is generated the same way as the S-0 slope in runup (see paragraph 7-F-39). The S-3 and S-1 currents use the same circuitry configuration as the S-4 current (see Figure 7-F-12), but use different resistor values. The resistor values are such that the S-3 current is 1/10 the

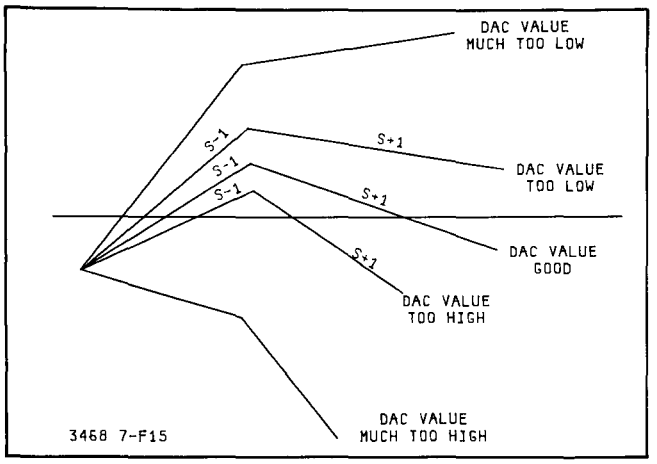

Figure 7-F-15. Determining the DAC Setting

S-4 current and the S-1 current is 1/1000 the S-4 current. The S+2 and S+1 currents use the same circuitry configuration as the S+4 current (see Figure 7-F-11). In this case, resistor values chosen are such that the S+2 current is 1/100 the value of S+4 current and S+1 is 1/1000 the value of S+4.

7-F-49. A/D Converter and Reference Circuitry. The A/D Converter Circuitry consists of the A/D Hybrid (U403), A/D Integrator (U401 and associated circuitry), A/D Controller (U462), and a DAC (U465 and associated circuitry). Since the Voltage Reference Circuitry (U461, U405, U404, U402, and associated circuitry) uses part of the A/D Hybrid (for stability purposes) and since it is also used by the A/D Converter, it is considered part of the converter circuitry. Refer to Schematic 3 for the following explanation on the A/D Converter Circuitry (except for the DAC, see paragraph 7-F-46 and 7-F-47 for its explanation).

a. **A/D Hybrid (U403).** The A/D Hybrid, shown in Figure 7-F-16, operates as follows:

1. The A/D Hybrid has, internal to it, various latches, decoders, and a clock generator. The decoders receive control information from the A/D Controller, then decode the information and pass the new information to the latches. The latches then transfer the new information to the various switches in the hybrid during each clock pulse. The clock pulses are generated by the clock

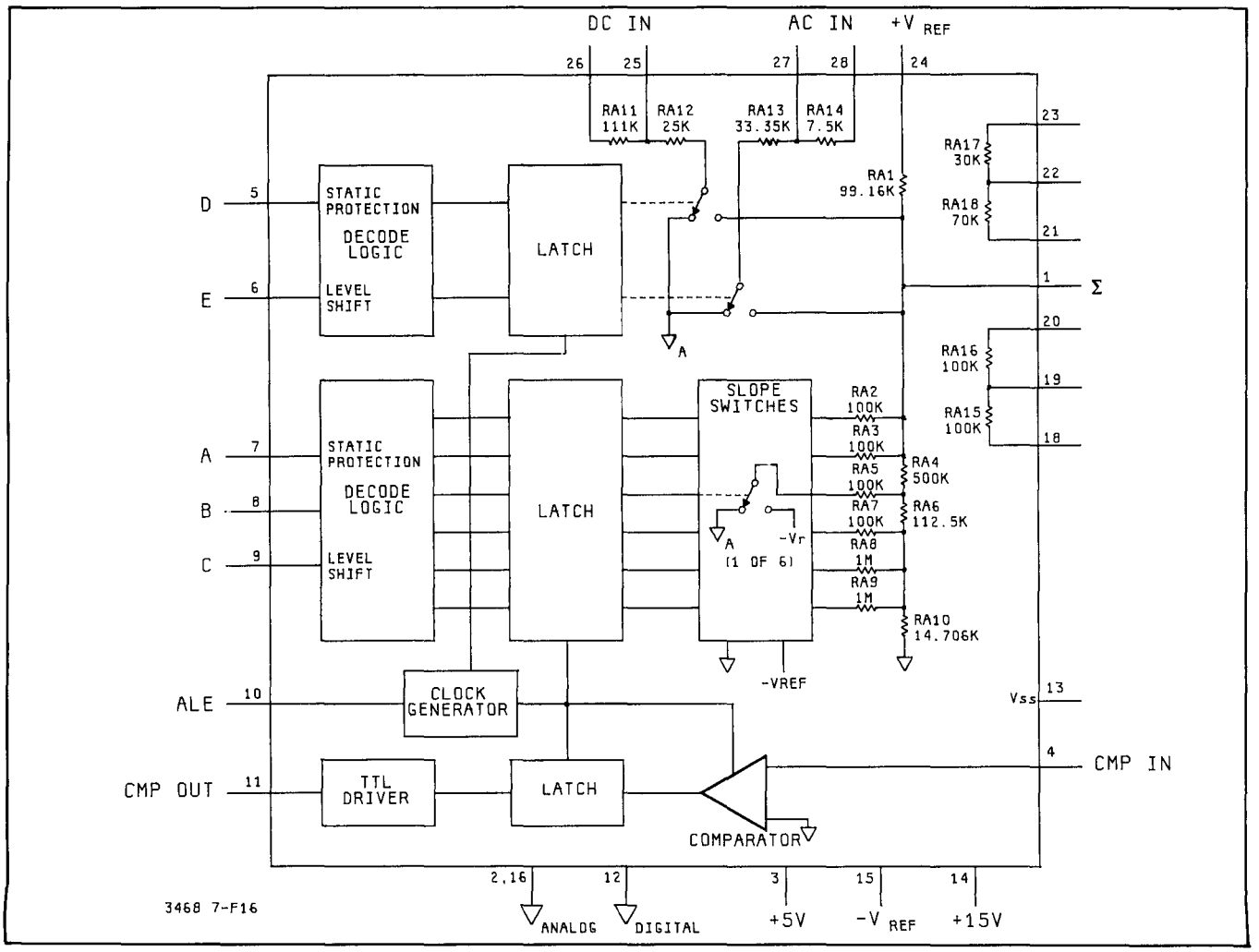

Figure 7-F-16. A/D Hybrid (U403)

generator which is syncronized by the ALE clock (from the A/D Controller). The hybrid receives all its control information from ports P10 through P14 of the A/D Controller (U462 pins 27 to 31). The information is transferred over the A, B, C, D, and E lines (U403 pins 5 through 9) of the hybrid.

2. The S-4, S+4, S-3, S+2, S-1, S+1, S-0, and S+0 currents are developed using resistors RA2 through RA10 in conjunction with the slope switches.

3. The A/D comparator is also inside the A/D Hybrid and its input is connected to the output of the A/D Integrator. The comparator updates its output during each clock pulse. Since the comparator's output is connected to a latch, the output is transferred to a TTL driver during each clock pulse. The TTL driver is a buffer which connects the output of the latch to the A/D Controller.

4. Dependent on the function selected, the hybrid connects the DC/Ohms Input Amplifier's output or the AC to DC Converter's output to the A/D Integrator's (U401) input resistor (RA1 in U403). This is done by the input switches inside the hybrid.

b. **A/D Integrator (U401 and associated circuitry).** The A/D Integrator consists of an amplifier (U401) with capacitor feedback (C410). Since the amplifier is inverting, the output slopes of the integrator will be positive for negative input currents (and vice versa).

c. **A/D Controller (U462).** The A/D Controller controls the operation of the A/D Converter. This includes the control of the runup and rundown operation, and selecting the correct currents (S-4, S+4, etc.). Refer to paragraph 7-F-77 for more information on the A/D Controller.

d. **Voltage Reference.** The Voltage Reference provides three stable reference voltages: -10V, +10V, and a buffered -10V. The circuitry, shown in Figure 7-F-17, is explained as follows:

1. The -10V reference voltage is used by the A/D Hybrid (U403) to develop stable and accurate S-4, S+4, S-3, etc. currents. The reference voltage is developed by non-inverting amplifier (U405) using feedback resistors in U403 and a 7V reference diode (zener diode U461). The 7V reference diode is connected to the amplifier's positive terminal and determines the stabilty of the reference voltage. The diode voltage is very stable since the case of the diode has internal heaters to keep the diode temperature as constant as possible. The feedback resistors for U405 are in U403 for good stability.

2. The buffered -10V is used by the A/D Hybrid as a stable -10V power supply. The voltage is developed by X1 gain non-inverting amplifier U404 and the -10V reference voltage.

3. The +10V reference voltage is used by the A/D Hybrid (in conjunction with the -10V reference) to develop the S-4, S+4, S-3, etc. currents. The +10V reference voltage is also used by the Ohms Current Source to develop a stable ohms current (see paragraph 7-F-21). The reference voltage is developed using inverting amplifier U402 and feedback resistors in U403.

7-F-50. 3478A Logic Circuitry

7-F-51. General. The 3478A Logic Circuitry can be divided into two circuit areas: Chassis Common Cir-

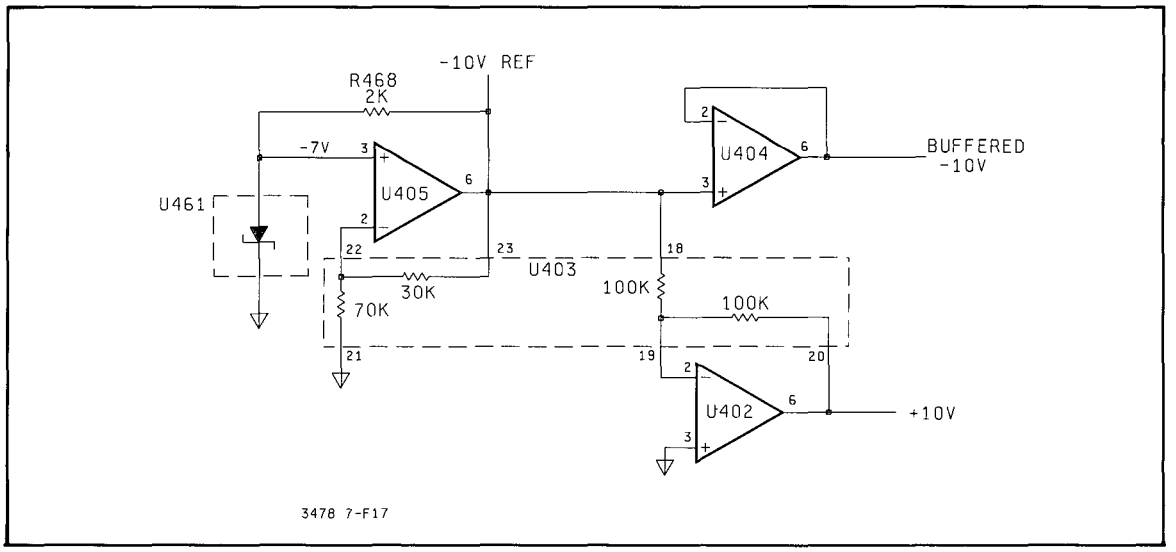

Figure 7-F-17. 3478A Simplified Reference Circuitry

cuitry and Floating Common Logic Circuitry. Communications between the circuitry is done by the Isolation Logic. The circuitry is described as follows:

7-F-52. Chassis Common Circuitry - paragraph 7-F-55.

a. Main CPU (U501) Circuitry - paragraph 7-F-57.
b. Program ROM (U502) - paragraph 7-F-58.
c. Power-On and Reset Circuitry - paragraph 7-F-59.
d. CMOS RAM - paragraph 7-F-60.
e. RAM Addressing - paragraph 7-F-61.
f. Reading the RAM - paragraph 7-F-62.
g. Sending Data to the RAM paragraph - 7-F-63.
h. Keyboard Operation - paragraph 7-F-65.
i. Display Operation - paragraph 7-F-66.
j. HP-IB Operation - paragraph 7-F-67.
k. Rear Panel Switch Circuitry - paragraph 7-F-68.
l. Voltmeter Complete - paragraph 7-F-69.
m. External Tigger - paragraph 7-F-70.

7-F-53. Isolation Logic - paragraph 7-F-71.

7-F-54. Floating Common Logic Circuitry - paragraph 7-F-75.

a. A/D Controller (U462) Operation - paragraph 7-F-77.
b. A/D Converter Control - paragraph 7-F-78.
c. Input Hybrid Control - paragraph 7-F-79.
d. Digital to Analog Converter Operation -paragraph 7-F-80.
e. CPU Reset Operation - paragraph 7-F-81.
f. Front/Rear Switch Position - paragraph 7-F-82.

7-F-55. Chassis Common Circuitry

7-F-56. The Chassis Common Circuitry controls the operation of the whole instrument, including front panel and remote operation. The major circuitry is the Main Controller Circuitry, consisting of a CPU (U501) and a Program ROM (U502). The operation of the Chassis Common Circuitry is descibed in the following paragraphs. Unless otherwise specified, refer to Schematic 3 for the explanation.

7-F-57. Main CPU (U501) Circuitry. The operation of the CPU and associated circuitry is as follows:

a. The CPU has an internal 128 bytes of RAM memory and a clock. The frequency and stability of the clock is determined by 5.856 MHz crystal Y501.

b. The Data Lines (D0 to D7) from the CPU are used as both Data Lines and the lower 8 bits of the Address Lines (A0 to A7). This is done by multiplexing the lines. The Address Lines are used to address the Program ROM, CMOS RAM, and the HP-IB Chip. The Data Lines send and receive data between the CPU and the Program ROM, CMOS RAM, and HP-IB Chip. The ALE (Address Latch Enable) line goes low to latch the lower 8 Address bits on U513. The Address bits are then sent to the Program ROM, CMOS ROM, and HP-IB Chip.

c. Other lines from the CPU are bi-directional Ports. The ports are used to send data to the display and to send, and receive data between the Front Panel Pushbuttons and Isolation Logic. The ports used to send data to the display (P20 to P23) are also used as the upper Address bits (A8 to A11).

7-F-58. Program ROM (U502). The Program ROM is addressed when its CE Line (Chip Enable at U502 pin 20) is low. The low comes from the CPU's PSEN Line (Program Store Enable at U501 pin 9). Address A0 to A7 comes from latch U513. Address bits A8 to A11 comes from Ports P20 to P23 (U501 pins 21 to 24). Address bit A12 comes from Port P26 (U501 pin 37) of the CPU. When the ROM is addressed and enabled, data from the ROM is transfered to the Data Lines.

7-F-59. Power-On and Reset Circuitry. The Power-On and Reset Circuitry are used to reset the CPU after the 3478A is turned on, when the front panel TEST/RESET button is pressed, and if the CPU inadvertantly goes to a non-operational state. The circuitry operates as follows:

a. **Power-On Circuitry.** Refer to Figure 7-F-18, or Schematic 3 and 4. The Power-On Circuitry resets the CPU when the 3478A is turned on and when +5V power supply is low. The step by step operation is as follows:

1. When the 3478A is turned on, the positive input of comparator U550C goes high after the +5V power supply comes up.

2. Since the negative terminal of U550C is connected to BT701, the output of the comparator at-

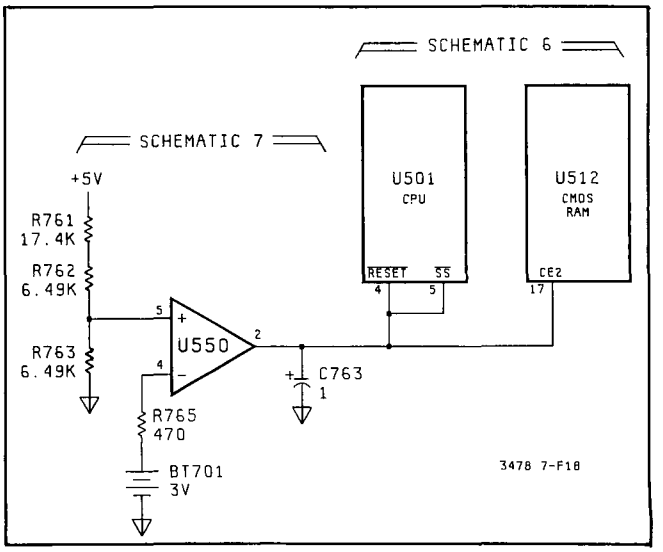

Figure 7-F-18. Power-On Circuitry

tempts to go high and charges capacitor C763. The output goes high since the comparator has an open collector output and a pull-up resistor is connected between the CPU's $\overline{\text{RESET}}$ line (output of U550C and U550D) and +5V (the resistor is internal to the CPU).

3. During the charge time, the $\overline{\text{RESET}}$ line is held low until the capacitor is charged to a high level.

4. The $\overline{\text{RESET}}$ line goes high and the CPU resets and turns on. The 3478A is now in its turn-on state.

5. As long as the $\overline{\text{RESET}}$ line is low, the CPU's $\overline{\text{SS}}$ (Single Step) line is low (the line is connected to the $\overline{\text{RESET}}$ line). The SS line steps the CPU to its first program line. The program line sets the $\overline{\text{PSEN}}$ line high, which disables the Control ROM ($\overline{\text{CE}}$ high). This prevents the ROM from operating until the CPU turns on.

6. When the $\overline{\text{RESET}}$ line is low, the CE2 line of the CMOS RAM (U512) is also low and disables the RAM (see paragraph 7-F-61).

7. The CPU is also reset when the +5V power supply goes low. A low +5V sets the positive input of U550C low which makes U550C's output low. This resets the CPU.

b. **Reset Circuitry.** Refer to Figure 7-F-19, or Schematic 3 and 4. The Reset Circuitry is used to reset the CPU when the TEST/RESET button is pressed or if the CPU inadvertently goes to a non-operational state. The step by step operation is as follows:

1. During normal operation, counter U507 is continuously incremented by the ALE clock.

2. Port P14 (U501 pin 31) continuously output data to the keyboard (P15 is one port used to scan the keyboard, see paragraph 7-F-65). This resets the counter as long as the keyboard is scanned. The reset pulse is developed from P15 using C501 and R528.

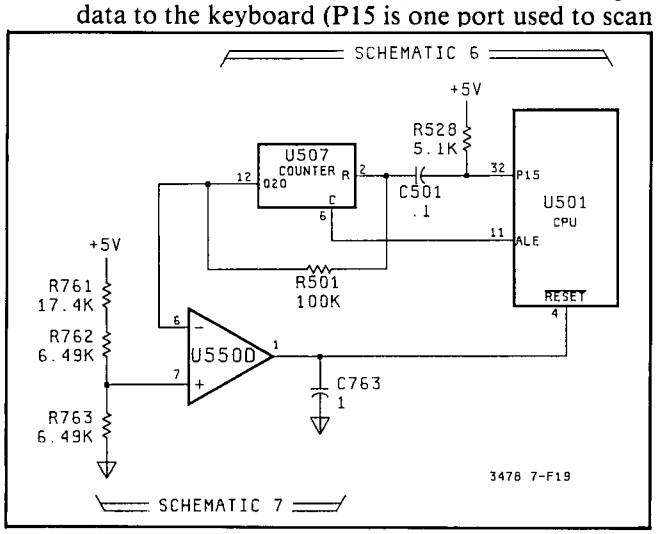

Figure 7-F-19. Reset Circuitry

3. If the TEST/RESET button is pressed or the CPU goes to a non-operational state, the keyboard scanning is stopped.

4. Since the ALE clock is still operating, the counter keeps incrementing for about 1.3 seconds.

5. After the 1.3 seconds, the Q output of U507 goes high (RESET REQ line goes high). This is because the counter is not being reset.

6. The Q output is connected to the negative terminal of comparator U550D. This brings the output of U550D low which in turn brings the $\overline{\text{RESET}}$ line low.

7. The ALE clock turns off and the counter stops incrementing.

8. The Q output goes low and the output of U550D attemps to go high and charges C763 (see step a-2).

9. Once the capacitor is charged to the high level, the $\overline{\text{RESET}}$ line once again goes high. The CPU then resets and turns on. The 3478A is now in its turn-on state.

7-F-60. CMOS RAM. The CMOS RAM is used to store the 3478A'S Calibration Constants. The following paragraphs explain how the RAM is addressed, how data (constants) is read from the RAM, and how new data (new constants) is sent to the RAM. This is done using the RAM's Address, Input, and Output Lines. The Address Lines are connected to the CPU's lower 8 Address bits (A0 to A7). The RAM's input and output lines (D1 to D4) are connected to each other and to the D0 to D3 Data Lines.

7-F-61. RAM Addressing. The RAM can only be addressed as long as line CE2 (Chip Enable 2 at U512 pin 17) is high. The line is high when the 3478A is turned on. Line $\overline{\text{CE1}}$ (Chip Enable 1 at U512 pin 19) can be high or low. This line is used to read the RAM (see next paragraph).

7-F-62. Reading the RAM. The RAM can be read under the following conditions.

a. Line OD (Output Disable at U512 pin 18) must be low. It is low when the $\overline{\text{RD}}$ Line (Read at U501 pin 8) is low.

b. Line $\overline{\text{CE1}}$ must also be low. It receives the low from one section of the Quad flip-flop U506 (pin 6).

The flip-flop operates like a latch and transfers data from Port P23 during each ALE cycle.

c. Once the previous conditions are met (the RAM is addressed) and line CE2 is high, data from the RAM is transferred to the Data Lines.

7-F-63. Sending Data to the RAM. The RAM can receive new Data when its R/W line (Read/Write at U512 pin 20) is low. This can only happen if the 3478A's Cal Enable Switch (located on the front panel) is on and the $\overline{WR}$ line of the CPU (Write at U501 pin 10) is low. The following explains the operation.

a. The Cal Enable Switch brings one input of NOR gate U508C low.

b. The other input of the gate is a low from the $\overline{WR}$ line.

c. The output of U508C goes high, and since NOR gate U508D is configured as an inverter, the output of U508D goes low. The RAM is now ready to receive new data.

7-F-64. Since the 3478A's Calibration Constants are stored in the CMOS RAM, the constants must remain in the RAM when the 3478A is turned off (or power removed). This is done by battery BT701 in the +5V Power Supply Circuit. In addition, the RAM should not see any possible write commands (R/W low) during the time that power is removed. The RAM must be disabled. This is because a write command may erase some calibration constants. The RAM is disabled by comparator U550C (part of the CPU's power-on circuit in the +5V power supply). The operation is as follows (refer to Schematic 4 for the explanation):

a. As long as the 3478A is on, the RAM gets its supply voltage from CR500.

b. When power is off, the RAM gets its supply voltage from battery BT701 through diode CR764. The battery voltage is used for data retention.

c. After turning power off, the RAM is disabled by setting line CE2 low. This is done by comparator U550C (see Schematic 4). The comparator senses a low (or no +5V) from voltage divider R761, R762, and R763. Since U550C's inverting input is at the battery voltage, the output of U550C becomes low. This discharges capacitor C763 before the power supply goes off. This makes line CE2 low and disables the RAM.

7-F-65. Keyboard Operation. The Keyboard's pushbuttons are connected in a 4x4 matrix and are continuously scanned by the CPU. The operation is as follows:

a. One side of the matrix is connected to Ports P10 to P13 of the CPU (U501 pins 27 to 30) and the other side is connected to Ports P14 to P17 (U501 pins 31 to 34).

b. Before scanning starts, Ports P14 to P17 are low. When scanning begins, starting with Port P14, each port goes sequentially high.

c. During the time that the keyboard is scanned, the CPU determines which one and if any of Ports P10 to P13 are high. A high on P10 to P13 is used to determine the button pressed. For example, the SRQ button is pressed and turns the corresponding SRQ switch on. This connects Port P11 to P17 and makes P11 high when P17 is high. Since the CPU knows when it sets P17 high and also knows when P11 is high, the pressed button is determined.

7-F-66. Display Operation. The 3478A Display is an alphanumeric display with 12 annunciators. The CPU sends serial data to the Display Circuitry which in turn does all the necessary decoding of the data (to display readings, etc.). The operation is as follows:

a. With line PWO high, the CPU can send new data to the Display Circuitry. Data is in serial form and is sent on the Data line (U506 pin 4). For the Display Circuitry to receive and decode the data, the other display lines have to send certain information to the circuitry. This is as follows:

1. The Display Circuitry requires two clock inputs to receive data, I1 and I2. The inputs come from flip-flop U506 (pin3) and Port P25 for clock inputs I1 and I2, respectively. (Flip-flop U506 is used as a latch between the CPU and the Display Circuitry.)

2. The ISA line (U506 pin 5) is used to give instructions to the Display Circuitry.

3. The SYNC line (U506 pin 6) is used to tell the Display Circuitry when to look for instructions.

b. With line PWO (from Port P23 of the CPU at U501 pin 36) low, the Display Circuitry operates without receiving any data from the CPU. The circuitry can operate in this mode since it has an internal clock (capacitor C502 is the frequency reference). With the circuitry in the internal mode, no updating of the display is done. Line PWO is controlled by the CPU.

7-F-67. HP-IB Operation. All interfacing between the CPU and the Hewlett-Packard Interface Bus (HP-IB) is done by the HP-IB Chip (U503) and two Bus Transceivers (U504 and U505). The HP-IB Chip is a microprocessor and changes the data sent and received by the CPU to the necessary HP-IB information (e.g. Listen, Talk, etc.). The Transceivers transfer and receive the HP-IB information between the HP-IB Chip and the Bus. The circuitry operates as follows:

a. The HP-IB Chip (U503) receives its clock signal from the CPU's T0 output (U501 pin 1).

b. When U503 is addressed (by the CPU) and its $\overline{WR}$ (Write) line is low, data from the CPU is sent over the Data Lines to U503. Line $\overline{WR}$ gets its low from the CPU's WR line. With the CPU $\overline{WR}$ line low, its $\overline{RD}$ (Read) line is high (which makes U503's $\overline{RD}$ line high). Depending on the Address selected (RS0 to RS2 at U503 pins 21 to 23, which are the A0 to A2 Address Lines of the CPU), U503 interprets the data as a command (ATN, SRQ, etc.) or data (DIO1 to DIO8) and sends the appropriate information to the HP-IB.

c. When U503 is addressed (by the CPU) and its $\overline{RD}$ line is low, U503 is enabled to send data to the CPU over the Data Lines. Line $\overline{RD}$ gets its low from the CPU's $\overline{RD}$ line. Depending on the Address selected (RS0 to RS2, see previous step), the data may be remote data from the HP-IB (Program Codes, etc.) and status information (Remote, Local, etc.).

d. The CPU continuously checks (for HP-IB data) and updates U503.

7-F-68. Rear Panel Switch Circuitry. The Rear Panel Switch (S501) is an 8 section DIP switch used to select the 3478A's HP-IB Address, set the Power-On SRQ Status Bit, set the 3478A to the Talk-Only Mode, and to set the multimeter to the selected power line frequency. The switch positions are determined by the CPU when driver U510 is enabled. The switches that are on (set) will then bring the corresponding data lines low. The driver is enabled when line $\overline{G1}$ (CPU's $\overline{RD}$ line) and $\overline{G2}$ (from flip-flop U506) are both low. The operation of the switches is as follows:

a. **HP-IB Address.** The switches marked A0 to A4 set the 3478A's HP-IB Address. When the CPU determines the setting of the switches, it passes the information to the HP-IB Chip. (Refer to this manual's Section III for more information on addressing the 3478A.)

b. **Power-On SRQ Bit.** The switch marked POW SRQ is used to set the Power-On SRQ Status Bit. The setting of this switch is also passed on to the HP-IB Chip. (Refer to Section III of this manual for information on SRQ.)

c. **Talk-Only Mode.** When all A0 to A4 switches are on, the 3478A's Talk-Only Mode is selected. Here again, the CPU sends the necessary information to the HP-IB Chip.

d. **Power Line Frequency.** The 50/60Hz switch is used to set the 3478A for the correct power line frequency. The CPU determines the position of the switch and passes it on to the A/D Controller (located in the Floating Common Circuitry). Dependent on the position of the switch, the A/D Controller selects the corresponding Integration Time of the A/D Converter (1/60 second for 60Hz or 1/50 second for 50Hz, etc.).

7-F-69. Voltmeter Complete. The Voltmeter Complete pulse is connected to inverter U508C from the PROG line of U501. The output of U508C is connected to inverters U508D, E, and F with their outputs connected to the Voltmeter Complete Terminal. Inverters U508D, E, and F are used as output buffers and CR504, CR505, and R538 is the protection circuitry. The voltmeter complete output is a negative going TTL pulse with a duration of approximately 1μS.

7-F-70. External Trigger. An external trigger pulse (connected to the External trigger Input) is used to trigger the 3478A, when the multimeter is in the External Trigger mode. The operation is as follows:

a. When an external trigger pulse is received, J-K flip-flop U514B is clocked and its Q output goes high. Since the Q output is connected to the $\overline{INT}$ input of the CPU, $\overline{INT}$ goes high.

b. If the 3478A is configured to a trigger mode other than the External Trigger mode, no action is taken. $\overline{INT}$ remains high.

c. If the 3478A is in the External Trigger mode, the CPU checks the state of the $\overline{INT}$ line. If the line is high, the 3478A is triggered. If the line is low, the CPU keeps on checking the line until $\overline{INT}$ goes high or the 3478A is configured to another trigger mode.

d. When $\overline{INT}$ goes high (and the 3478A is in the External Trigger mode), the 3478A triggers and initiates a measurement cycle.

e. During that time, the HP-IB Chip is addressed and sends out a trigger pulse (from its TRIG output at U503 pin 5).

f. The pulse is inverted by flip-flop U514A (which is configured as an inverter) and resets flip-flop U514B. The 3478A is now ready for a new trigger pulse.

7-F-71. Isolation Logic

7-F-72. The 3478A's Isolation Logic is used to communicate between the CPU (U501) in the Chassis Common Circuitry and the CPU (U462) in the Floating Common Circuitry. The serial data from U501 (going to U462) is used to control the operation of Floating Common Circuitry. This includes instrument set-up information (Function, Range, etc.) and A/D information (like changing the integration time). The serial data from U462 to U501 is the multimeter's measurement data and certain self-test data (A/D test information). The following explains the circuitry operation.

7-F-73. The data from U501 is output from Port P27 (U501 pin 38) and applied to drivers U508A and U508B. The drivers apply the data to the input (primary) of transformer T501. The output of T501 is applied to

comparators U468A and U468B. The comparators are used to bring the low level output of T501 up to a TTL level. The output of the comparators is applied to the T0 input of U462 (U462 pin 1), which is the same data as the data sent by U501. This makes the output waveform of U501 the same as the input waveform of U462.

7-F-74. Serial data from U462 to U501 is sent using drivers U467A and U467B, transformer T401, and comparators U550A and U550B. The circuitry operation is the same as sending data from U501 to U462 (see previous paragraph). The difference is that the data is input to the T1 line of U501 (U501 pin 39) instead of T0, as is the case with U462.

7-F-75. Floating Common Logic Circuitry

7-F-76. The main parts of the Floating Common Logic Circuitry are the A/D Controller and the A/D Converter. The A/D Controller consists of CPU U462 and the A/D Converter is U403 and associated circuitry. Other circuitry includes an Digital to Analog Converter (U465 and associated circuitry) and a Voltage Reference Supply (U404, U405, and U461). For the explanation on the A/D Converter and Voltage Reference refer to paragraph 7-F-49. The operation of the A/D Controller, the Digital to Analog Converter, and other logic circuitry is explained in the following paragraphs.

7-F-77. A/D Controller (U462) Operation. The purpose of U462 is to control the A/D operation, set up the Digital to Analog Converter, and to send set-up (Range and Function) information to the Input Hybrid U102 (see paragraph 7-F-13 for its operation and purpose). The CPU also determines measurement data from the A/D Converter and sends the data (readings) to the Chassis Common CPU (U501). The CPU (U462) has an internal 128 bytes of RAM memory, 2K bytes of ROM memory, and a clock. The frequency and stability of the clock is determined by a 10.98MHz crystal Y460. The ROM is used to control the CPU operation and the RAM is used to store Autozero constants (see paragraph 7-F-14). Since the U462 has an internal ROM, all addressing and data transfer is done using bidirectional Ports P10 to P17 (U462 pins 27 to 34) and P20 to P27 (U462 pins 27 to 34, 21 to 24, and 35 to 38).

7-F-78. A/D Converter Control. The A/D Converter receives control data from the CPU Ports P10 to P14 (U462 pins 27 to 31). The data is used to select the various slopes (see paragraph 7-F-49) in the converter. The output of the A/D Converter (CMP, the Comparator Output) is applied to the T1 input of the CPU (at U462 pin 1). The ALE output (Address Latch Enable at U462 pin 11) is used as the converter's clock. Refer to paragraph 7-F-31 for more information on the A/D operation.

7-F-79. Input Hybrid Control. The control lines to the Input Hybrid (U102) which come from Ports P15 to P17 of the CPU and are: Data, Mode, and Clock. The lines do the following:

a. When the Clock input (U102 pin 24) is low, no data is transferred into the hybrid.

b. When the clock input is high, the following occurs:

1. When the Mode input (U102 pin 25) is low, data on the Data line (U102 pin 26) is transferred into the hybrid (into an internal shift register).

2. When the Mode input is high, the data in the hybrid (in its shift register) is used to set-up the switches in the hybrid.

7-F-80. Digital to Analog Converter Operation. The 3478A's A/D Converter requires a certain offset voltage (see paragraph 7-F-46 for more information). This offset is applied to the negative input of the A/D Integrator (U401) and comes from the Digital to Analog Converter (DAC). The offset voltages are developed by resistors R401 to R406, which are selected by Hex D flip-flop U465. Each time the flip-flop is clocked by the ALE line, its Q0 to Q5 outputs are set either high or low. This depends on the position (high or low) of Ports P20 to P25. The outputs in conjunction with resistors R401 to R406 generates a certain offset voltage.

7-F-81. CPU Reset Operation. The Chassis Common CPU (U501) can reset the Floating Common CPU (U462) whenever needed. This is normally done when the 3478A is turned on. The operation is as follows.

a. Counter U466 increments each time it is clocked by the ALE line (U462 pin 11).

b. As long as the Chassis Common sends data bytes over the Isolation logic, the counter is reset each time the data byte has a high (a high resets the counter).

c. If the counter's Reset line stays low (e.g. no high level from the data bytes), the counter keeps on incrementing for about 11mS. The counter's Q14 output then goes high.

d. The Q14 output is inverted by NOR gate U467C (connected like an inverter) and sets the CPU's RESET line (U462 pin 14) low. The CPU turns off.

e. The CPU remains off until the counter's Reset line receives a high from the data bytes. This resets the counter and its Q14 output goes low. The RESET line of the CPU goes high and U462 resets and turns on to a predefined condition.

7-F-82. Front/Rear Switch Position. The 3478A's Front/Rear Switch position is determined by the state (high or low) of Port P26. A low state is when the port is

connected to ground (by the switch). This state shows that the Front/Rear Switch is in the rear position.

7-F-83. Power Supplies

7-F-84. General. The 3478A has one set of power supplies for the Floating Common Circuitry and another set of supplies for the Chassis Common Circuitry. The Floating Common Circuitry has three supplies: +15V, -15V and +5V. The Chassis Common Circuitry has one +5V supply and a +3V lithium battery (BT701). The supply is used by the Chassis Common logic circuitry and the battery is used by the CMOS RAM (U512) to supply the RAM when the battery is off. Unless otherwise noted, refer to Schematic 4 for the following explanation on the 3478A's power supplies.

7-F-85. +15V and -15V Power Supplies (Floating Common). A full-wave bridge rectifier, consisting of CR701, CR702, CR705, and CR706, develops the raw (unregulated) voltages for the supplies. The regulated +15V is developed by voltage regulator U703 and the -15V by U702. Breakdown diodes CR711 and CR713 are used for overvoltage protection. Overvoltage protection of regulators U702 and U703 is by diodes CR715 and CR714, respectively. The diodes conduct if the raw (unregulated) voltage is too large. Capacitors C702, C703, C705, and C706 are filter capacitors. Temperature sensitive resistor RT706 and RT707 are used to protect supplies from excessive output currents. The protection circuitry operates as follows:

a. If the output current of the +15V supply is excessive, RT707 heats up. If the -15V has excessive current, RT706 heats up.

b. Since RT706 and RT707 have positive temperature coefficients, their resistance increases to a large value due to high temperature.

c. The high resistance causes most of the supply voltage to drop across RT706 and RT707, shutting down the respective supply.

d. The large resistance value remains until RT706 or RT707 cool down (the supply draws normal current).

7-F-86. +5V Power Supply (Floating Common). This power supply receives its raw (unregulated) voltage from full-wave rectifiers CR703 and CR704. The +5V is developed by voltage regulator U701. Breakdown diode CR712 is used for overvoltage protection. Capacitor C704 and C711 are filter capacitors.

7-F-87. +5V Power Supply (Chassis Common). This power supply receives its raw (unregulated) voltage from full-wave rectifier CR760 and CR761. The +5V is developed by voltage regulator U760. Breakdown diode CR766 is used for overvoltage protection and capacitor C761 and C762 are filter capacitors. Comparators U550C and U550D are used to reset the Chassis Common CPU (U501). Refer to paragraph 7-F-59 for information on the comparators operation.

7-F-88. +3V Power Supply (CMOS RAM). As long as the 3478A is turned on with ac power applied, the CMOS RAM (U512) receives its supply voltage from the +5V power supply through diode CR500 (see Schematic 3). When power is off, the battery (BT701) supplies the voltage to the RAM through diode CR764. This circuit maintains the supply voltage on the CMOS RAM to keep the 3478A's calibration constants in the RAM's memory.

SERVICE GROUP G
SCHEMATICS

Service Group G Contents

Title	Figure
General Schematic Notes	7-G-1
3478A Block Diagram	7-G-2
Input Circuitry and Ohms Current Source (Schematic 1)	7-G-3
AC to DC Converter (Schematic 2)	7-G-4
A/D Converter and Control Logic (Schematic 3)	7-G-5
Power Supplies (Schematic 4)	7-G-6

7-G-1. INTRODUCTION

7-G-2. This Service Group has the 3478A's Block Diagram and Schematics. In addition, general schematics notes are also included to gain an understanding on how to use the schematics.

GENERAL SCHEMATIC NOTES

1. RESISTANCE IN OHMS, CAPACITANCE IN MICROFARADS, INDUCTANCE IN MICROHENRIES UNLESS OTHERWISE NOTED.
2. ASTERISK DENOTES A FACTORY-SELECTED VALUE. VALUE SHOWN ON SCHEMATIC TYPICAL.
3. ENCLOSES FRONT PANEL MARKING.
4. ENCLOSES REAR PANEL MARKING.
5. CIRCUIT ASSEMBLY BORDERLINE.
6. OTHER ASSEMBLY BORDERLINE. ALSO USED TO INDICATE MECHANICAL INTERCONNECTIONS (GANGING).
7. \918/ DENOTES WIRE COLOR CODE. CODE USED IS SAME AS THE RESISTOR OR COLOR CODE. FIRST NUMBER IDENTIFIES THE BASE COLOR, SECOND NUMBER IDENTIFIES THE NARROWER STRIPE.

   E.G. \918/ DENOTES WHITE BASE, BROWN WIDE STRIPE, GRAY NARROW STRIPE.
8. DENOTES GROUND ON FLOATING COMMON CIRCUITRY.
9. DENOTES GROUND ON CHASSIS COMMON CIRCUITRY. CONNECTED TO INSTRUMENT FRAME GROUND.

Figure 7-G-1. General Schematic Notes

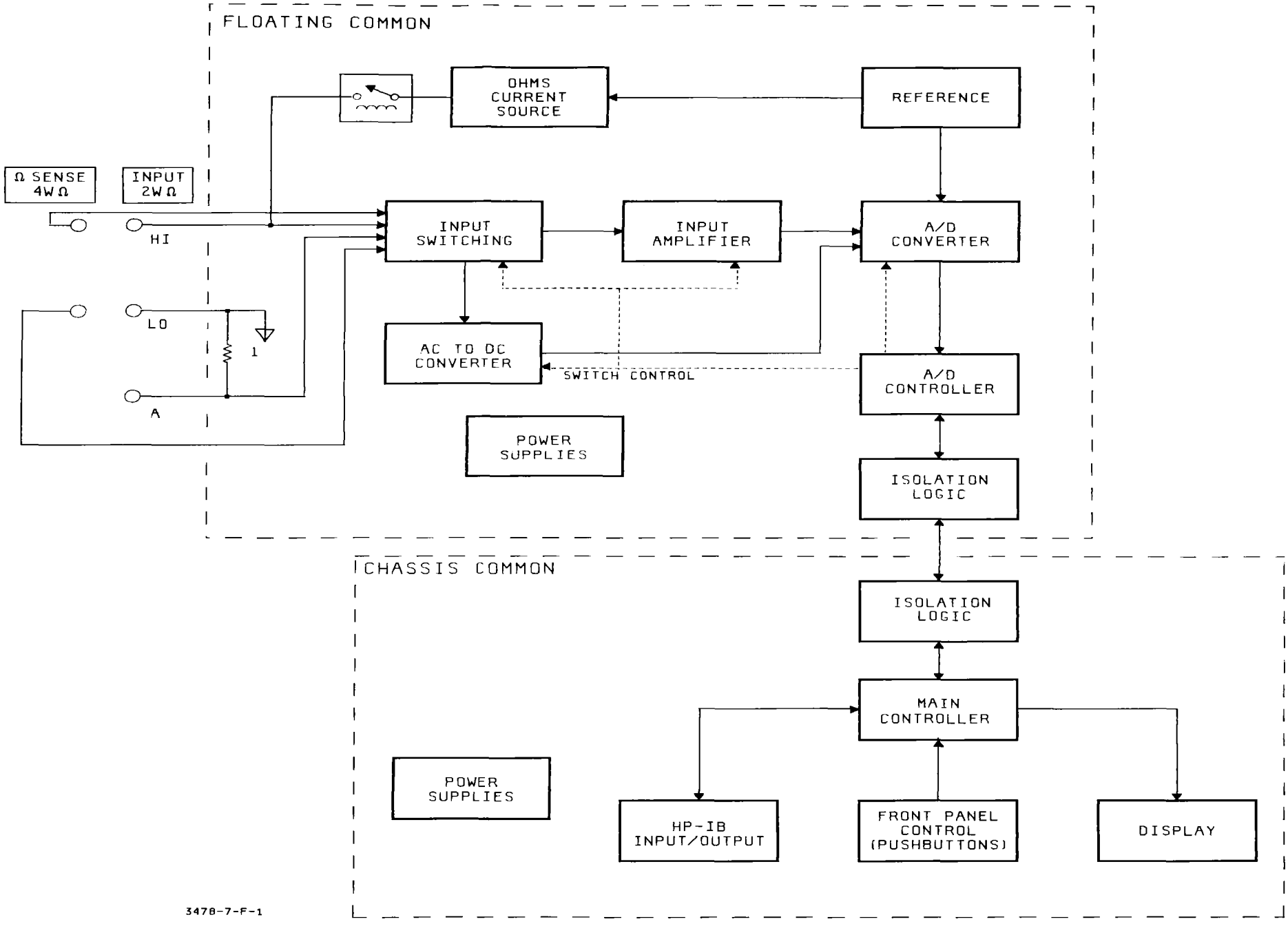

Figure 7-G-2. 3478A Block Diagram

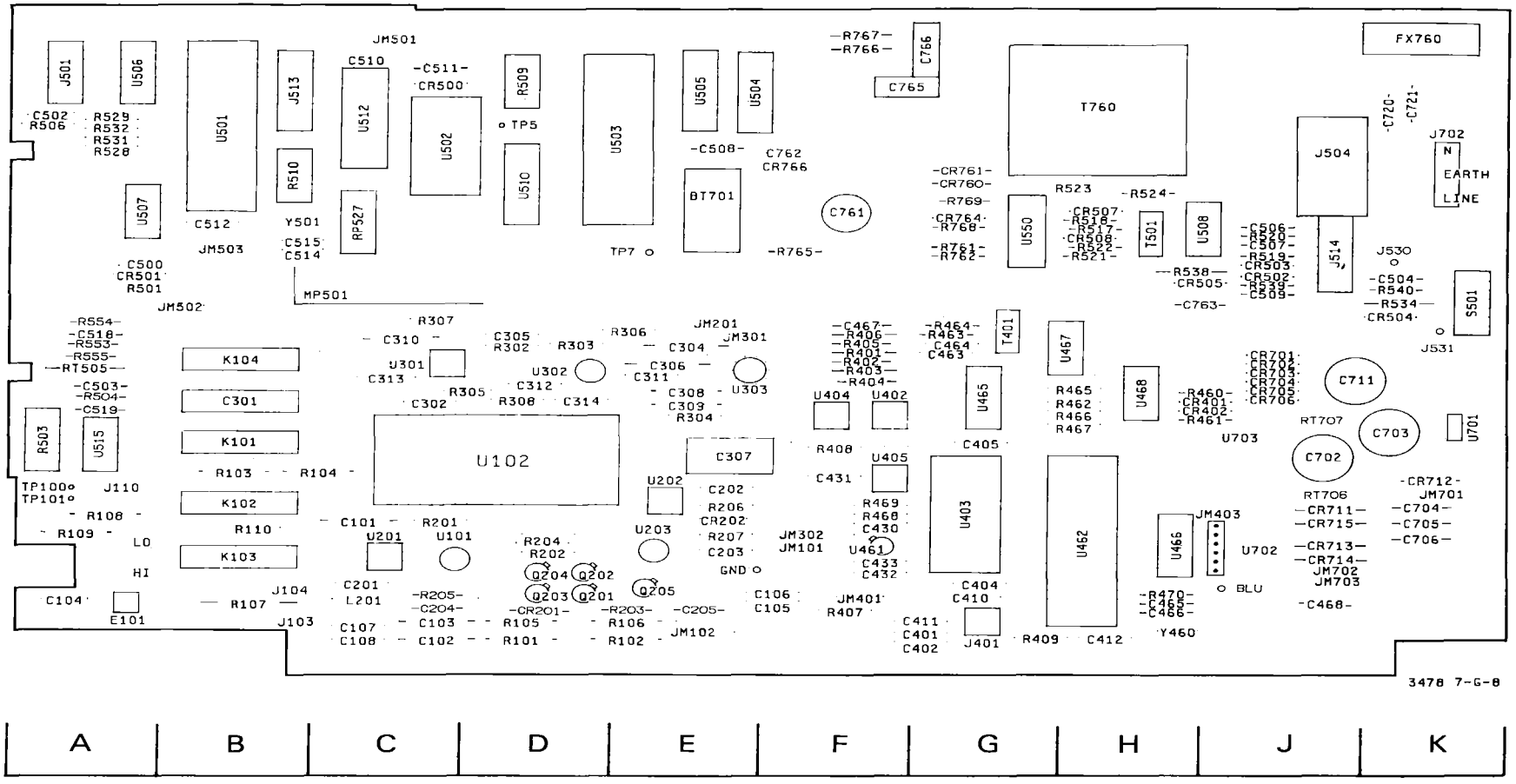

Component Locator for Input Circuitry and Ohms Current Source
7-G-4

COMPONENT LOCATOR TABLE FOR SCHEMATIC 1 (INPUT CIRCUITRY)

Component	Col.
C101	C
C102	C
C103	C
C104	A
C105	E,F
C106	E,F
C107	C
C108	C
C201	C
C202	E
C203	E
C301	B
C314	D
CR201	C

Component	Col.
CR202	E
E101	A
JM101	F
JM201	E
K101	B
K102	B
K103	B
K104	B
L201	C
Q201	D

Component	Col.
Q202	D
Q203	D
Q204	D
Q405	E
R101	D
R102	E
R103	B
R104	B,C
R105	D
R106	E
R107	B
R108	A
R109	A
R110	B

Component	Col.
R201	C
R202	D
R203	D
R204	D
R205	D
R206	E
R207	E
TP100	A
TP101	A
U101	C,D
U102	C,D
U201	E
U202	E
U203	E

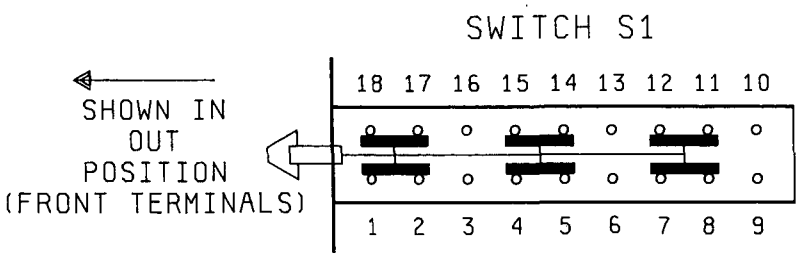

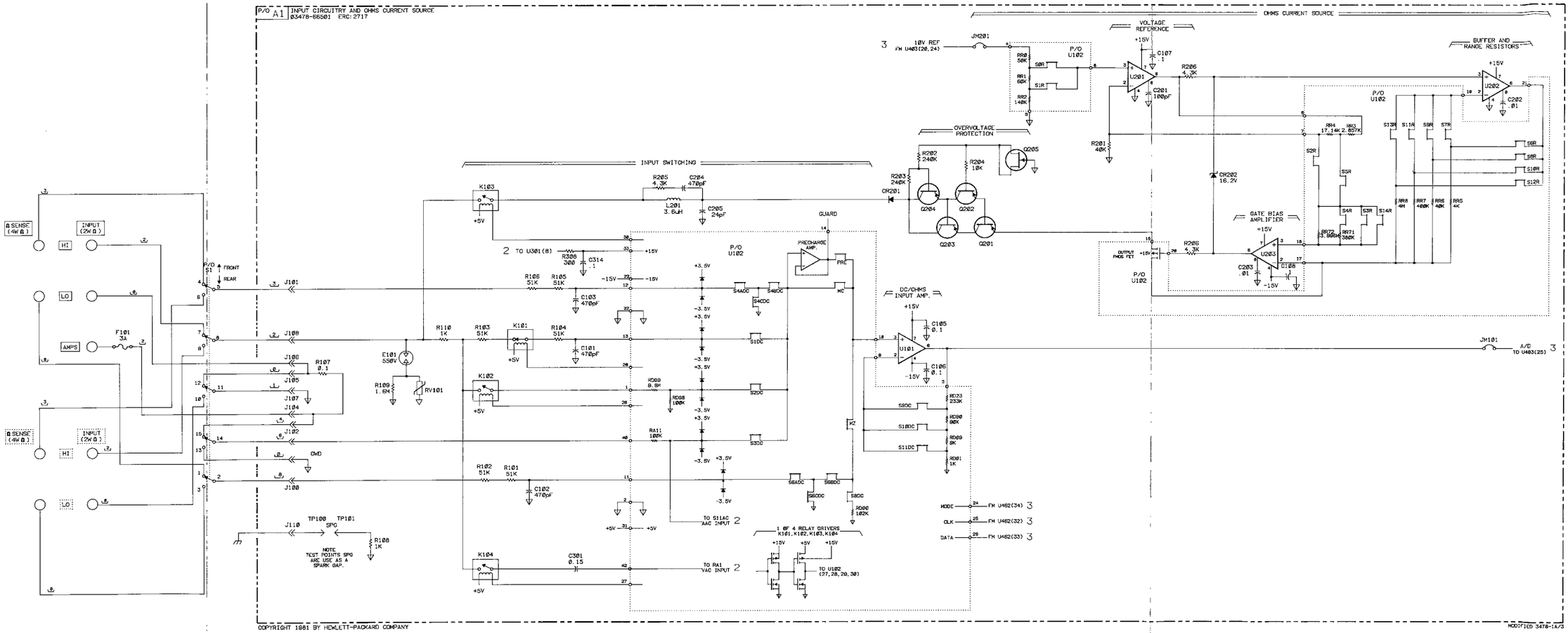

1

Figure 7-G-3. Input Circuitry and Ohms Current Source

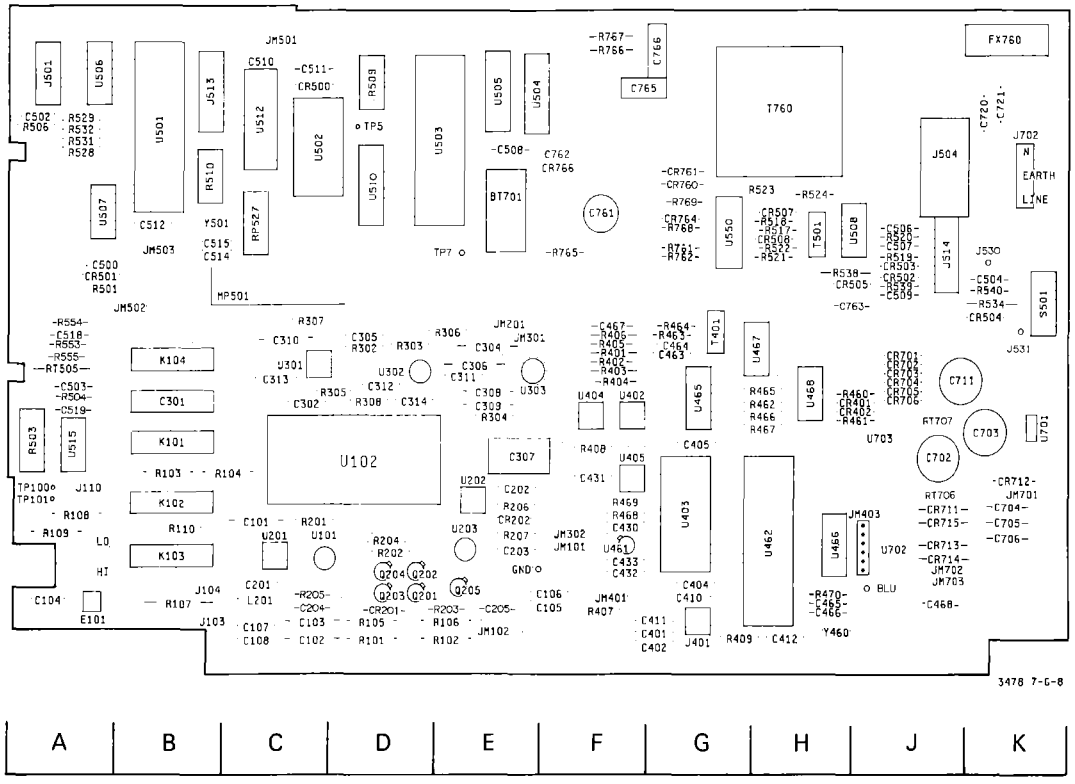

U303

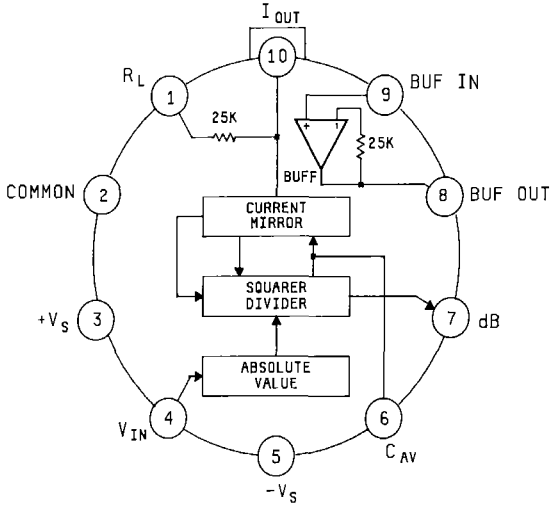

Component	Col.
C301	B
C302	C
C304	E
C305	D
C306	E
C307	E
C308	E
C309	E

Component	Col.
C310	C
C311	E
C312	D
C313	C
C314	D
JM301	E
JM302	F

Component	Col.
JM303	D
R302	D
R303	D
R304	E
R305	C,D
R306	D,E
R307	C

Component	Col.
R308	D
U102	C,D
U301	C
U302	D
U303	E

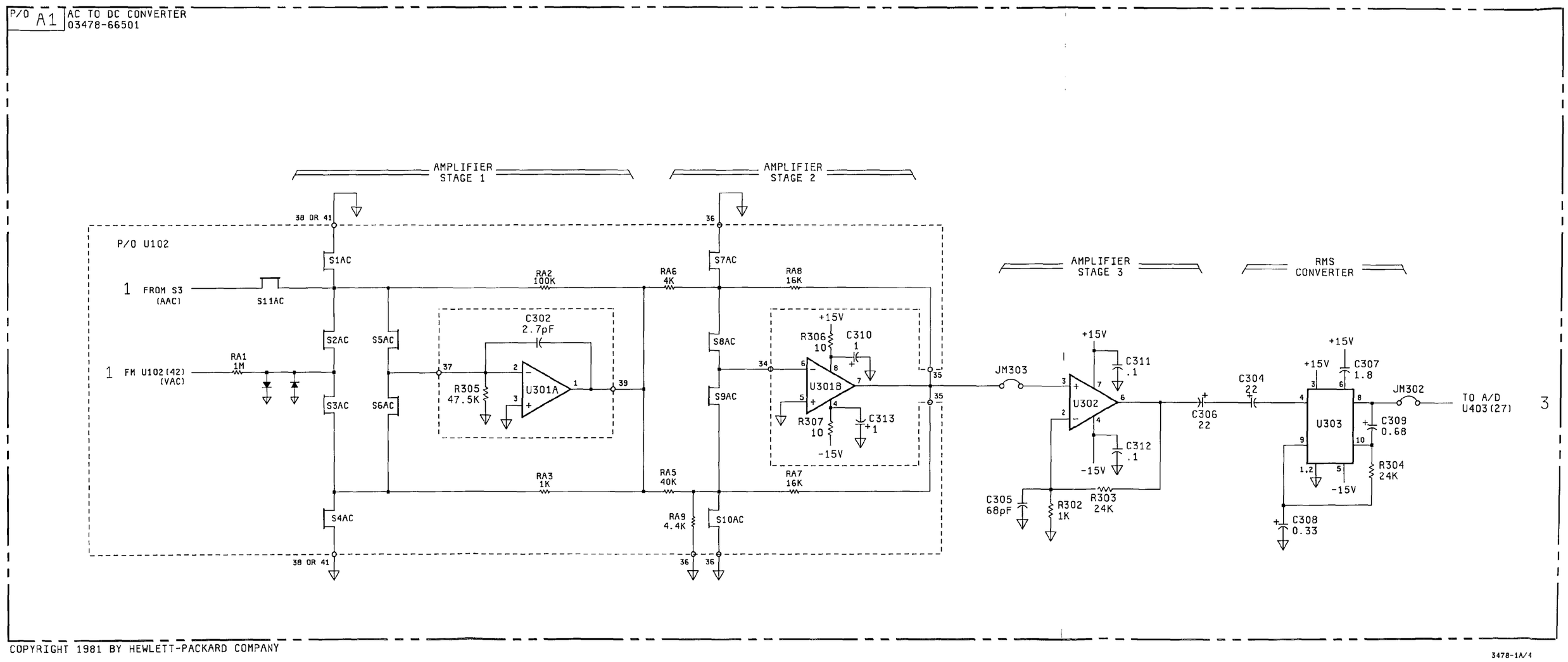

COPYRIGHT 1981 BY HEWLETT-PACKARD COMPANY

2

Figure 7-G-4. AC to DC Converter

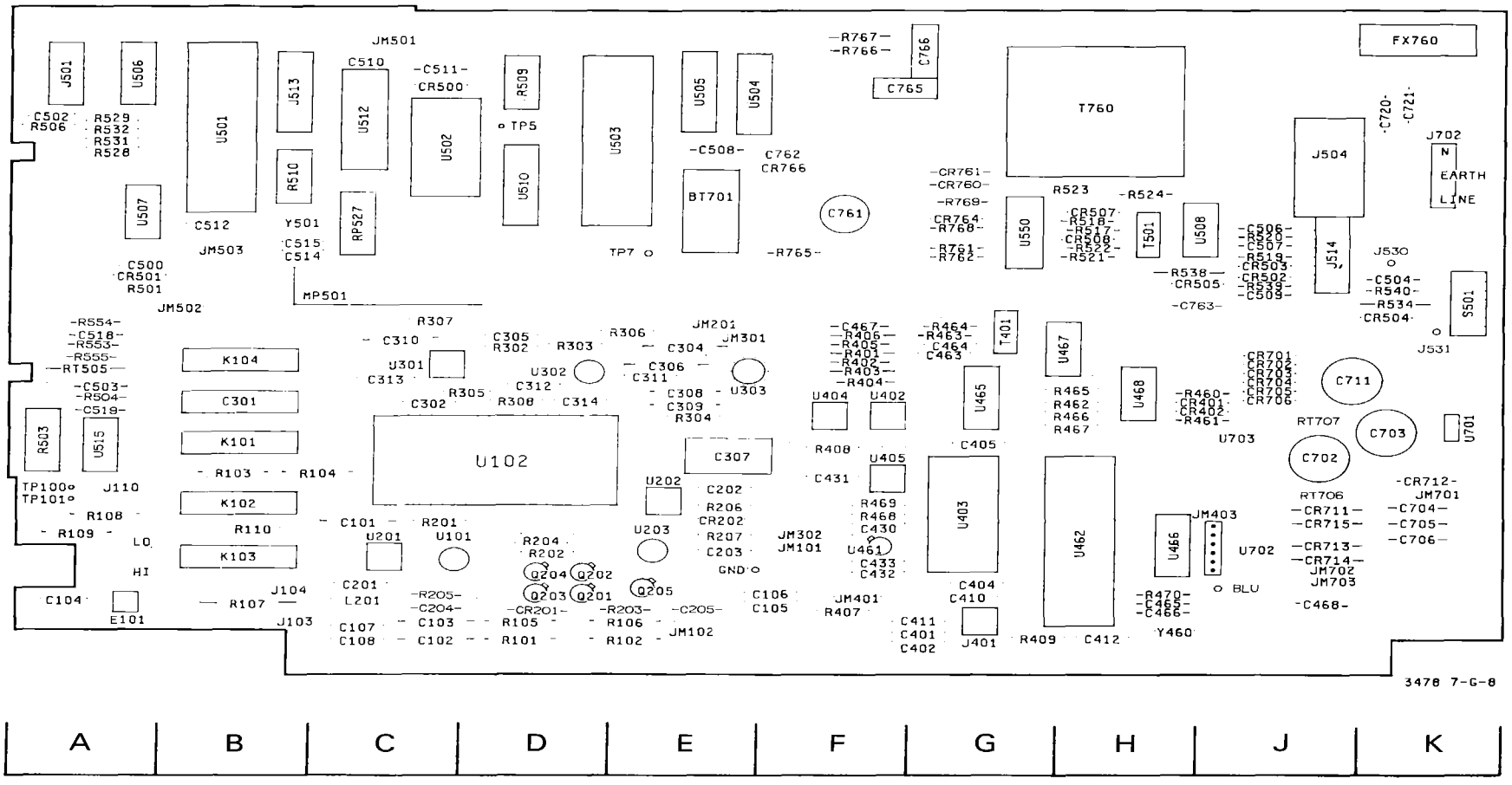

Component Locator for A/D Converter and Control Logic
7-G-8

COMPONENT LOCATOR TABLE FOR SCHEMATIC 3 (LOGIC)

Component	Col.
C401	F,G
C402	F,G
C404	G
C405	G
C410	G
C411	F,G
C412	H
C430	F
C431	F
C432	F
C433	F
C463	G
C464	G
C465	H
C466	H
C467	F
C468	J
C501	A
C502	A
C503	A
C504	K
C506	J
C507	J
C508	E
C509	J
C510	C
C511	C
C512	B
C514	B,C
C515	B,C
C518	A
CR401	H
CR402	H
CR500	A

Component	Col.
CR501	A
CR502	J
CR503	J
CR504	J,K
CR505	H
CR507	H
CR508	H
J501	A
J504	J
JM401	F
JM403	H
JM501	C
JM502	A,B
JM503	B
R401	E
R402	F
R403	F
R404	F
R405	F
R406	F
R407	F
R408	F
R409	G
R460	H
R461	H
R462	G,H
R463	G
R464	G
R465	G,H
R466	G,H
R467	G,H
R468	F

Component	Col.
R469	F
R470	H
R501	A
R503	A
R504	A
R506	A
R509	D
R510	B
R517	H
R518	H
R519	J
R520	J
R521	H
R522	H
R523	H
R524	H
R528	A
R529	A
R531	A
R532	A
R534	K
R538	H
R539	J
R553	A
RT505	A
RP527	C
S501	K
T401	G
T501	H
TP2	B

Component	Col.
TP3	B
TP4	B
TP5	D
TP6	A
TP7	E
TP8	B
TP9	B
U401	G
U402	F
U403	G
U404	F
U405	F
U461	F
U462	G,H
U465	G
U466	H
U467	G,H
U468	H
U501	B
U502	C
U503	D,E
U504	E,F
U505	E
U506	A
U507	A
U510	D
U512	C
U513	B
U514	J
U515	A
U550	G
Y460	H
Y501	B

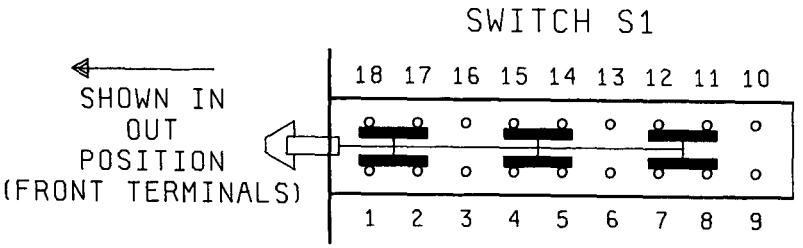

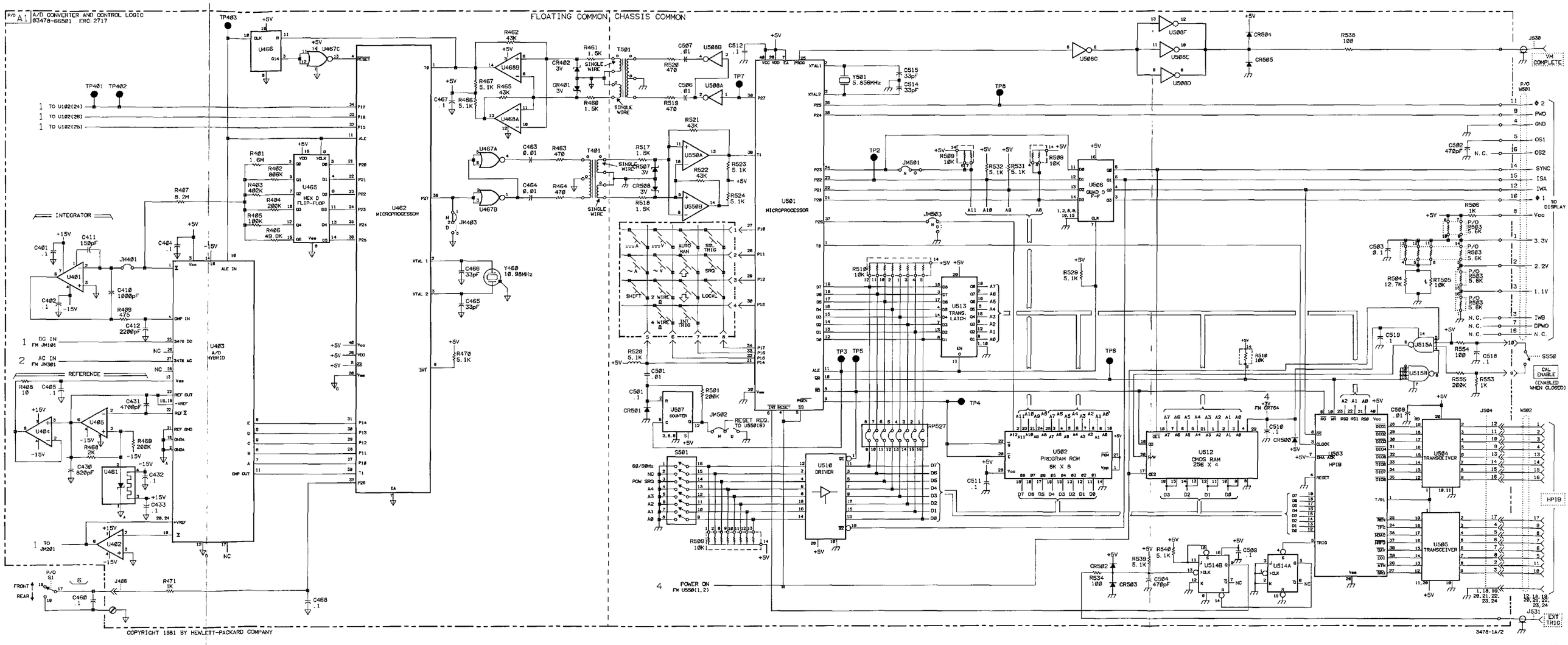

3

Figure 7-G-5. A/D Converter and Control Logic

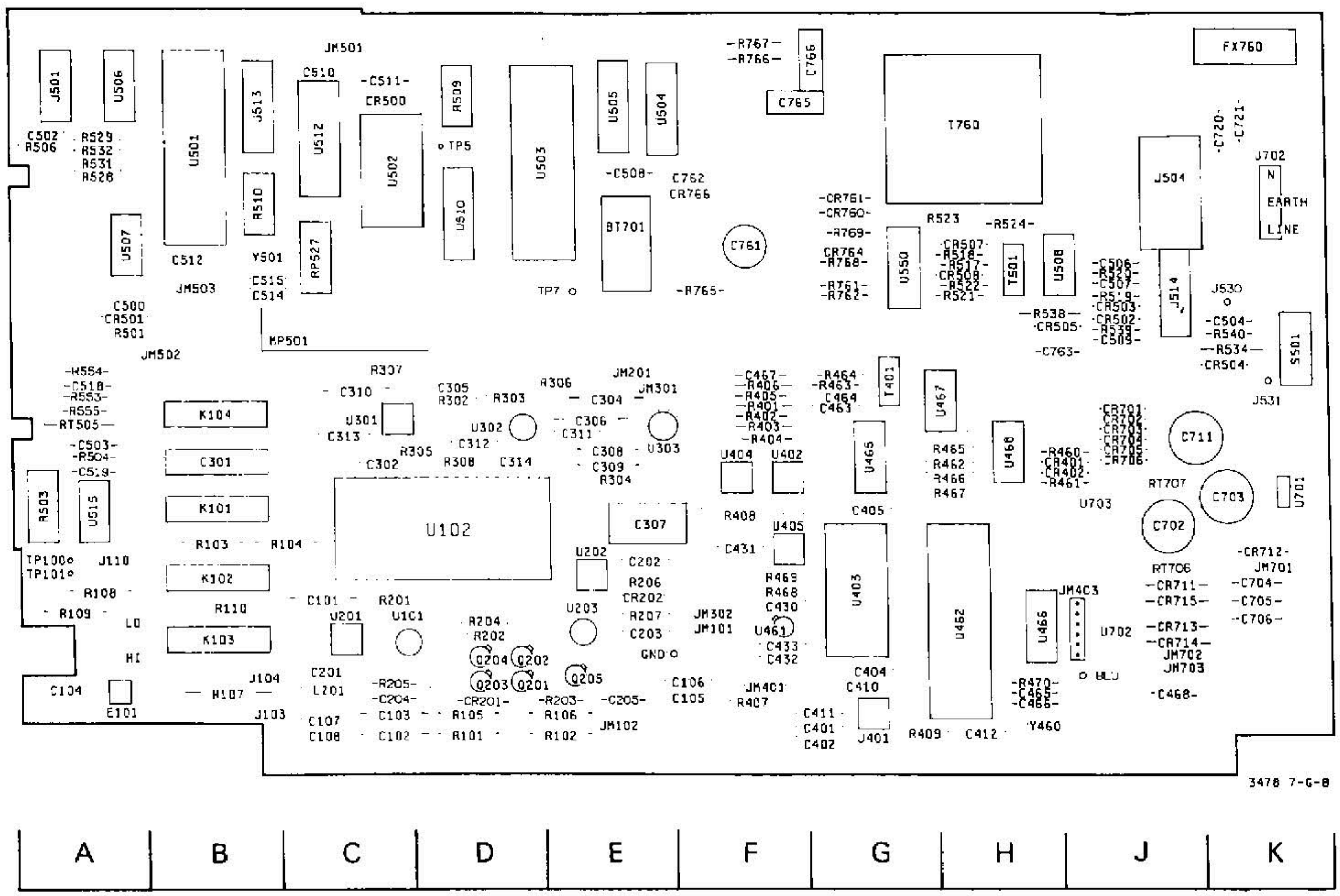

COMPONENT LOCATOR TABLE FOR SCHEMATIC 4 (POWER SUPPLY)

Component	Col.	Component	Col.	Component	Col.	Component	Col.
BT701	E	C766	G	CR761	G	R762	G
				CR762	G	R763	G
C702	J	CR701	J	CR764	G	R765	G
C703	K	CR702	J	CR767	E,F	R766	F
C704	K	CR703	J			R767	F
C705	K	CR704	J	FX760	J,K	R768	G
C706	K	CR705	J				
C711	J,K	CR706	J	J702	K	RT706	J
C720	K	CR711	J			RT707	J
C760	G	CR712	K	JM701	K		
C761	F	CR713	J	JM702	J	U550	G
C762	F	CR714	J	JM703	J	U701	K
C763	J,K	CR715	J			U702	J
C765	F,G	CR760	G	R761	G	U703	J

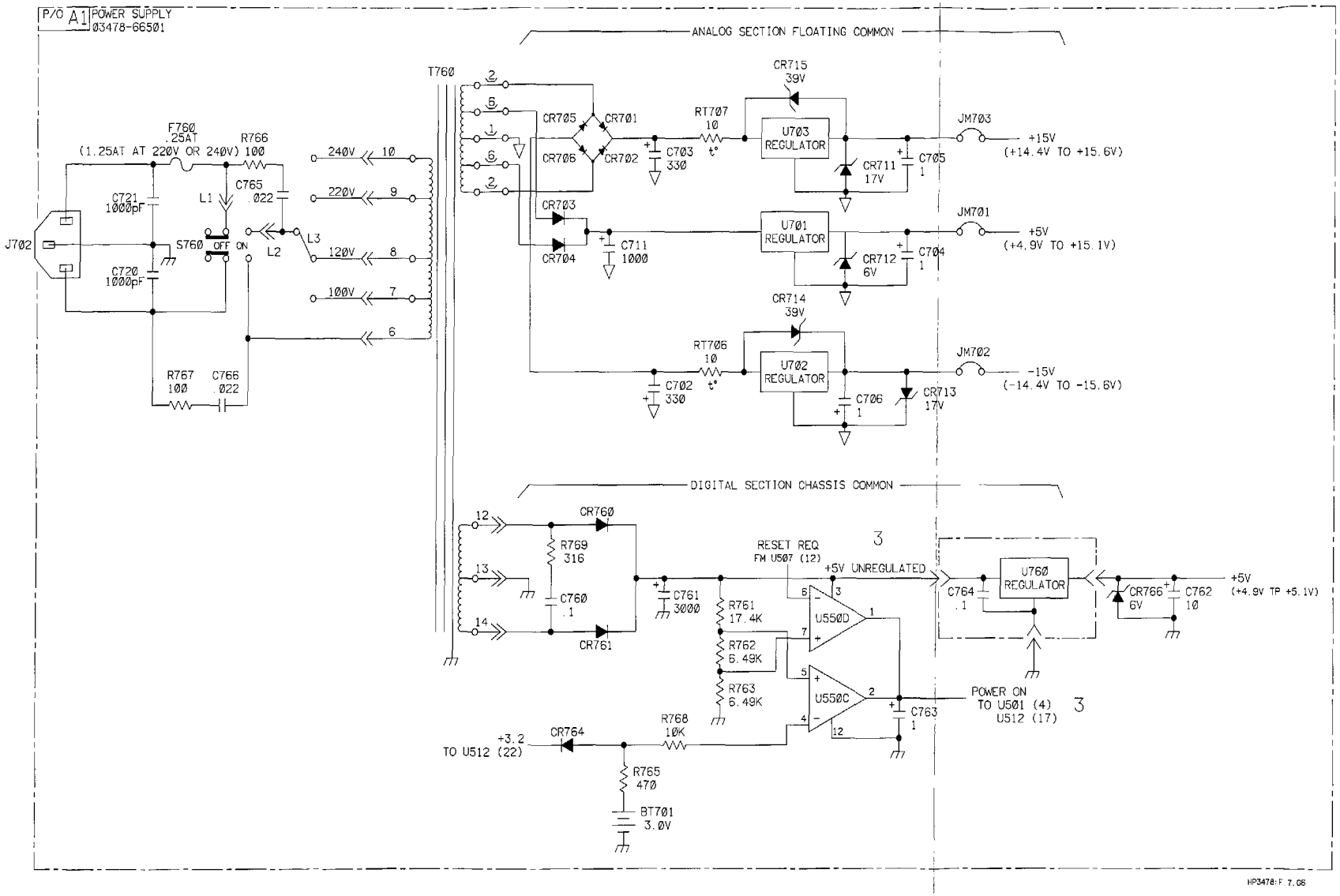

4

Figure 7-G-6. Power Supplies

APPENDIX A

A-1. Introduction

A-2. This appendix contains a general description of the Hewlett-Packard Interface Bus (HP-IB). HP-IB is Hewlett-Packard's implementation of IEEE Standard 488-1978, "Standard Digital Interface for Programmable Instrumentation". The information is non-controller dependent but, where appropriate, is dependent on the 3478A.

A-3. General HP-IB Description

A-4. The Hewlett-Packard Interface Bus (HP-IB) is a carefully defined interface which simplifies the integration of various instruments, calculators, and computers into systems. The interface provides for messages in digital form to be transferred between two or more HP-IB compatible devices. A compatible device can be an instrument, calculator, computer, or peripheral device that is designed to be interfaced using the HP-IB.

A-5. The HP-IB is a parallel bus of 16 active signal lines grouped into three sets, according to function, to interconnect up to 15 instruments. A diagram of the Interface Connections and Bus Structure is shown in Figure A-1.

A-6. Eight Signal lines, termed as DATA Lines, are in the first set. The Data Lines are used to transmit data in the form of coded messages. These messages are used to program the instrument function, transfer measurement data, coordinate instrument operation, and to manage the system. This allows you to set-up the instrument and read its measurement data. Input and Output of messages, in bit parallel byte serial form, are also transferred in the Data Lines. A 7-bit ASCII code normally represents each piece of data.

A-7. Data is transferred by means of an interlocking "handshake" technique which permits data transfer (asynchronously) at the rate of the slowest active device used in that particular transfer. The three DATA BYTE CONTROL lines coordinate the transfer and form the second set of lines.

A-8. The remaining five GENERAL INTERFACE MANAGEMENT lines are used to manage the devices on the HP-IB. This includes activating all connected devices at once, clearing the interface, and others. A condensed description is available in the Condensed Description of the Hewlett-Packard Interface Bus Manual, -hp- part number 59401-90030. The manual is available through your local -hp- Sales and Service Office.

A-9. HP-IB System Overview

A-10. The following paragraphs define the terms and concepts used to describe HP-IB (Bus) system operations.

A-11. HP-IB System Terms

a. **Address:** The characters sent by a controlling device to specify which device will send information on the HP-IB and which device(s) will receive that information. Addressing may also be accomplished by hardwiring a device to only send information or only receive information.

b. **Byte:** A unit of information consisting of 8 binary digits (bits).

c. **Device:** A unit that is compatible with the IEEE Standard 488-1978.

d. **Device Dependent:** An action a device performs in response to information sent over the HP-IB. The action is characteristic of an individual device and may vary from device to device.

e. **Polling:** This process typically is used by a controller to locate a device that needs to interact with the controller. There are two types of polling, as follows:

1. **Serial Poll:** This method obtains one byte of operational information about an individual device in the system. The process must be repeated for each device from which information is desired.

2. **Parallel Poll:** This methods obtains information about a group of devices simultaneously. The 3478A does not respond to a Parallel Poll.

A-12. Basic Device Communication Capabilities

A-13. Devices which communicate along the interface bus can be classified into three basic categories:

a. **Talker:** Any device that is able to send information over the HP-IB when it has been addressed. Only one talker may be active at a time; usually the one that is currently directed to send data. All HP-IB type calculators and computers are generally talkers.

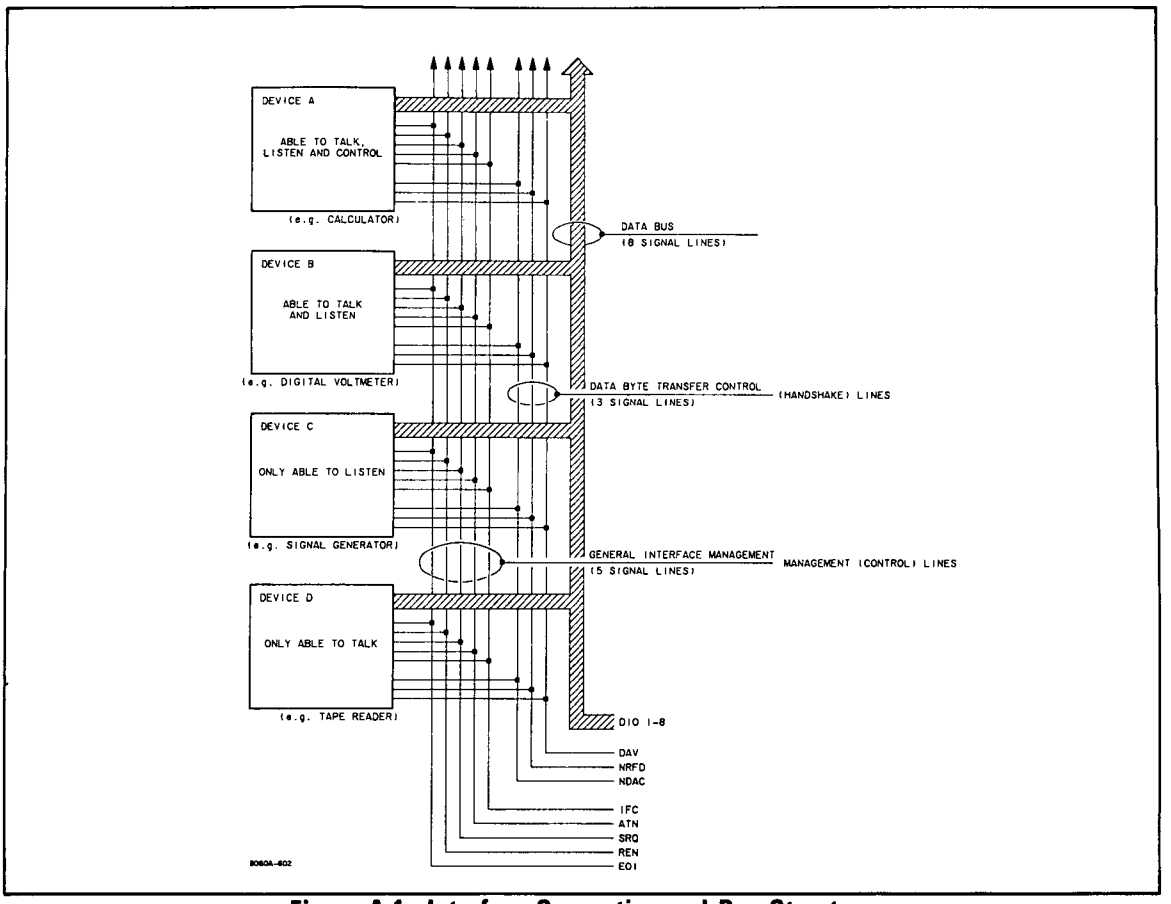

Figure A-1. Interface Connection and Bus Structure

b. **Listener:** Devices which receive information over the HP-IB, when they have been addressed. A device may or may not be both a talker and a listener. Calculators and computers are generally both a talker and a listener (at different times).

c. **Controller:** The device that can specify which device(s) on the bus is a talker or listener. There can be two types of controllers, an Active Controller and a System Controller. The Active Controller is the current controlling device. The System Controller can, however, take control of the HP-IB even if it is not the Active Controller. There can also be only one Active Controller at a time, even if several controllers are on the Bus.

A-14. HP-IB Messages

A-15. Different types of information can be passed over the HP-IB to one or more devices. Some of this inforamtion is in the form of messages, most of which can be separated into two parts. One part can be classified as the address portion specified by the controller and the information that comprises the messages. The second part can be classified as HP-IB management messages. These message are comprised of twelve messages and are called Bus messages.

a. **Data:** The actual information (binary bytes) sent by a talker to one or more listener. The information (data) can either be in numeric form or a character string.

b. **Trigger:** The Trigger message causes the listening device or devices to perform a device dependent action when addressed.

c. **Clear:** The Clear message causes the listening device(s) or all the devices on the HP-IB to return to their predefined device-dependent state.

d. **Remote:** This message causes the listening device(s) to switch from local front panel control to remote program control when addressed to listen.

e. **Local:** This message clears the REMOTE message from the listening device(s) and returns the device(s) to local front panel control.

f. **Local Lockout:** This message prevents a device operator from manually inhibiting remote program control.

g. **Clear Lockout and Set Local:** With this message, all devices are removed from the local lockout mode and revert to local. The remote message is also cleared for all devices.

h. **Require Service:** A device can send this message at any time to signify the device needs some type of interaction with the controller. This message is cleared by the device's STATUS BYTE message if the device no longer requires service.

i. **Status Byte:** A byte that represents the current status of a single device on the HP-IB. One bit indicates whether the device sent the require sevice message and the remaining seven bits indicate optional conditions defined by the device. This byte is sent from the talking device in response to a "Serial Poll" operation performed by the controller.

j. **Status Bit:** A byte that represents the operational conditions of a group of devices on the HP-IB. Each device responds on a particular bit of the byte thus identifying a device dependent condition. This bit is typically sent by devices in response to a parallel poll operation.

k. **Pass Control:** The bus management responsibility is transferred from the active controller to another controller by this message.

l. **Abort:** The system controller sends this message to unconditionally assume control of the HP-IB from the active controller. The message will terminate all bus communication but does not implement the CLEAR message.

A-16. 3478A Bus Capabilities

A-17. The 3478A interfaces to the HP-IB as defined by the IEEE Standard 488-1978. The interface functional subset which the 3478A implements is specified in Table A-1.

Table A-1. 3478A Device Capability

SH1	Source Handshake complete capability
AH1	Acceptor Handshake complete capability
T5	Basic talker, with serial poll, talk only mode, and unaddress with MLA.
TE0	No extended talker
L4	Basic listener, unaddress when MTA
LE0	No extended listener
SR1	Service request complete capability
RL1	Remote-Local complete capability
PP0	No parallel poll capability
DC1	Device Clear complete capability
DT1	Device Trigger complete capability
C0	No controller capability

A-18. HP-IB Worksheet

The HP-IB worksheet (Table A-2) can be used to determine the HP-IB capabilities of the other HP-IB compatible instruments in a system. The sheet may be filled in with the bus message applicability for your controller and for each HP-IB device. The bus capability for the 3478A has already been filled in. Refer to your controller manual and the manual(s) of your other device(s) for their Bus Message capabilities. Once the sheet is filled out, you should then have the HP-IB capabilities of your device(s).

Table A-2 HP-IB Worksheet

Message	Device							
INSTRUMENT IDENTIFICATION	MODEL 3478A				MODEL			
AND HP-IB ADDRESS	LISTEN YES TALK YES 5 BIT VALUE 23				LISTEN TALK 5 BIT VALUE 23			
DATA	S & R							
TRIGGER	R							
CLEAR	R							
LOCAL	R							
REMOTE	R							
LOCAL LOCKOUT	R							
CLEAR LO & SET LOCKOUT	R							
REQUIRE SERVICE	S							
STATUS BYTE	S							
STATUS BIT	N							
PASS CONTROL	N							
ABORT	N							

S = SEND ONLY R = RECEIVE ONLY S & R = SEND AND RECEIVE N = NOT IMPLEMENTED MODEL LISTEN

03478-90008

HEWLETT PACKARD

Printed in U.S.A.